IJCSN International Journal of Computer Science and Network, Volume 4, Issue 1, February 2015
ISSN (Online) : 2277-5420 www.IJCSN.org
Impact Factor: 0.417

A Survey of Real Time Trainable Robotic ARM Based on Experience Technique

[1] Mayuri Kanholkar , [2] Hemlata Dakhore

[1] Department of Computer Science and Engineering
G.H Raisoni Institute of Engineering and Technology for Women, Nagpur, India

[2] Department of Computer Science and Engineering
G. H. Raisoni Institute of Engineering and Technology for Women Nagpur, India

Abstract - Training of a robotic system have been used around for some time. Big companies like FANUC make their own robotic arm which are not already programmed. We have to program it for particular task. However, we are trying to develop a SELF EXPERIENCE replay learning technique wherein one can train robots to perform a task by performing the task once, MANUALLY. Such a system would reflect on the human methods of teaching wherein a person teaches a child how to perform a particular task by showing them how it is done by actually performing it once himself. For the purpose of demonstration of such a system, we will develop an algorithm via which the robot will record the actions when performed by the user during the 'learning phase' which is nothing but when the user is performing the action for the robot for the first time. In this paper, we explore and review various existing technologies, techniques and work being done on the same.

Keyword - *FANUC Factory automation numerical control , MANUALLY Done by any human being , SELF EXERIANCE experience by itself .*

1. Introduction

At present, industrial automation requires wide number of machines for repeatedly done the same number of action. The main difficulty to design such a system is complex programming and constant operating speed. So it can be overcome by design & develop a robotic arm based on experience learning approaches which work on real time.

An industrial robotic arm based on experience replay learning technique. In traditional approach the system is designed for dedicated task which has no other use, another disadvantage is user need to have knowledge of programming for reprogram of specific task, so it can be overcome by installing wired modules to enable wired control of the robotic arm via developed handheld controller. Algorithm can be developed based on experience learning approach to record action & convert them into devised motion codes and vice-versa. This type of arm has wide variety of application in industrial automations like open and close bottle neck, cleaning of specific surface or pick and place particular object.

To achieve such intelligent robotic arm, algorithm can be developed via which the robot will record the actions when performed by the user during the 'learning phase' which is nothing but when the user is performing the action for the robot for the first time. The prototype of a vehicular arm can be used to demonstrate & developed a system to run robot according to the sequence of recorded motion codes. An additional filter can installed for adding effects.

2. Related Work

Shih Huan Tseng1, Ju-Hsuan Hua2, Shao-Po Ma3 and Li-ehen Fu4 [2], 2013 IEEE International Conference on Robotics and Automation (ICRA) Karlsruhe, Germany, May 6-10, 2013.This paper focuses on developing intelligent robot which infer the human intentions through reorganisation the action & perform appropriate action from user feedback.

Sander Adam, Lucian Bus¸oniu, and Robert Babuˇska [1], IEEE transactions on systems, man, and cybernetics, march 2014.This paper focuses on a promising approach for Reinforcement-learning control is experience replay (ER), which learns quickly from a limited amount of data, by repeatedly presenting these data to an underlying RL algorithm.

Jamil Abou Saleh, Fakhreddine Karray, and Michael Morckos [4], WCCI 2012 IEEE World Congress on Computational Intelligence June, 10-15, 2012 – Brisbane, Australia.This paper intends to identify common performance metrics for task-oriented human-robot interaction.

Here present a methodology to assess the system performance of a human-robot team in achievement of collective tasks.

3. Proposed System

As a child observes the teacher's methods and actions and tries to replicate the same when he tries it himself, our system will install this characteristic into our robot as well. The user will train the robot to run on certain paths by manually driving it once, after which the robot will learn and perform the tasks itself.

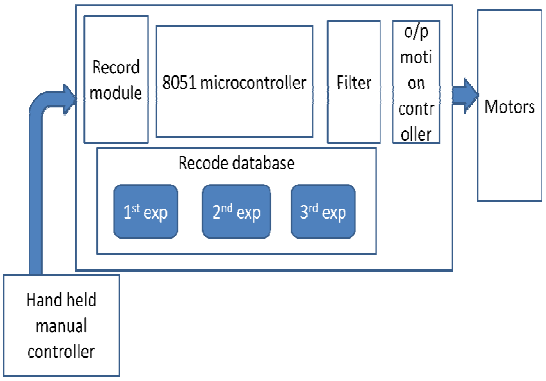

Fig.1:Basic system architecture

Wired hand held control will give experience in the form of motion. These signals of motions are stored into the record module. The Recode database will recode that motion into code and store it for use.

Recode module will also store the information of which action is performed and how many times that action is performed. Output motion controller will convert that recoded data into motion which is shown by robot/motor. Filters are applied on the recoded data to add additional effects.

4. Expected Outcome

A learning system can be developed which is trainable industrial robotic arm based on experience replay learning technique. With the development of this project, an experience learning based algorithm can developed that can be used in multi axis and open loop robots to achieve real time scalability, and functionality reconfiguration. This project will provide a wired module to enable wired control of the robotic arm via developed handheld controller to record action & convert them into devised motion codes and vice-versa. Additional filter section is there to edit or add effects during the replay action.

5. Conclusion

We have referred several papers, describing several techniques to train various robotic systems based on experience replay learning technique. Our main concern is adopting an accurate algorithm based on experience learning approach to record action & converts them into devised motion codes. Hence, it is important to have a very strong algorithm. Amongst the ones that we reviewed viz. Reinforcement Learning Technique and Human action Replication Method , we have chosen not to directly adopt one single algorithm but to adopt aspects from all, thus developing a learning system which will use to train industrial robots based on experience replay learning technique.

References

[1] Sander Adam, Lucian Bus¸oniu, and Robert Babuˇska, "Experience Replay for Real-Time Reinforcement Learning Control", IEEE Transactions on systems, man, and cybernetics, march 2014.

[2] Shih Huan Tseng1, Ju-Hsuan Hua2, Shao-Po Ma3 and Li-ehen Fu4, "Human Action Replication based Robot Performance Learning in a Social Environment", 2013 IEEE International Conference on Robotics and Automation (ICRA) Karlsruhe, Germany, May 6-10, 2013.

[3] D. Katagami, S. Yamada, "Active Teaching for an Interactive Learning Robot", Proceedings of IEEE international Workshop on Robot and Human Interactive Communication Millbrae. California. USA. Oct. 31 -Nov. 2, 2012.

[4] JamilAbouSaleh, FakhreddineKarray, and Michael Morckos, "A Qualitative Evaluation Criterion for Human-Robot Interaction System in Achieving Collective Tasks", WCCI 2012 IEEE World Congress on Computational IntelligenceJune, 10-15, 2012 - Brisbane, Australia.

[5] Puran Singh*, Anil Kumar, Mahesh Vashisth, "Design of a Robotic Arm with Gripper & End Effector for Spot Welding", Universal Journal of Mechanical Engineering , 2013.

[6] Maya C. et al., "Human Preference for Robot-Human Hand-over Configurations", IEEE/RSJ International Conference on Intelligent Robots and Systems, 2011.

[7] JamilAbouSaleh, FakhreddineKarray University of Waterloo, "Towards Generalized Performance Metrics for Human-Robot Interaction", conference proceedings, 2008.

[8] WolframBurgard, Armin B. Cremers, Dieter Fox, Dirk Hahnel, Gerhard Lakemeyer , Dirk Schulz, Walter Steiner, and Sebastian "The Interactive Museum Tour-Guide Robot" Thrun Computer Science Department III University of Bonn Aachen University, Germany.

Mayuri Kanholkar
BE (Information Technology) from Priydarshanis J.L.College of Engineering, Nagpur in 2012. Appearing ME 4th sem (Wireless communication & computing) from G.H. Raisoni College of Engineering & Technology for Women, Nagpur.

Hemlata Dakhore
BE (CSE) from G. H. Raisoni College of Engineering, Nagpurin 2007. MTech (CSE) from G.H. Raisoni College of Engineering, Nagpur in 2009.