IJCSN International Journal of Computer Science and Network, Volume 4, Issue 1, February 2015
ISSN (Online) : 2277-5420 www.IJCSN.org
Impact Factor: 0.417

A Survey on Industrial Control System for Reconfiguration and Processing

[1] Anupama Gomkale , [2] Ranjana Shende

[1] Department of Computer Science and Engineering, Rashtrasant Tukdoji Maharaj Nagpur University
G. H. Raisoni Institution of Engineering & Technology for Women,
Nagpur, Maharashtra, India

[2] Department of Computer Science and Engineering, Rashtrasant Tukdoji Maharaj Nagpur University
G. H. Raisoni Institution of Engineering & Technology for Women,
Nagpur, Maharashtra, India

Abstract - In industrial setups, there will wired sensors, wireless sensor and embedded devices which forms a heterogeneous programmable distributed system. To reconfigure devices each time user needs to develop the new code, For node reconfiguration. This require programming expertise. In this paper, we are trying to explore various technologies and techniques that may prove useful in developing a reconfigurable industrial system. To develop such a system, various methodological aspects are involved. They include clustering of the various systems, their communication, their reconfiguring engines, etc. Also, various API techniques that facilitate this reconfigurable facility are studied in this paper. We explore various existing technologies, devices, and techniques, which have been developed or are under development and study them for possible viability of use for our project.

Keyword - *Heterogeneous system.*

1. Introduction

Many industrial control systems, such as a refinery, thermal power plant, automation plant have hundreds or thousands of sensors and actuators along with embedded control system which automatic monitor and control functionalities with more advanced and complicated hardware. Due to some environment effects or any other technical effects, malfunction in devices or in sensors may occur. Traditionally, these devices must need to design again replaced. This in turn, increases the cost and time consuming. So the systems must support easy and convenient system reconfiguration with different combinations of hardware and software. Software for machine control systems is usually designed and implemented with a set of functions, such as device drivers, control functions, and algorithms, all running on a desired platform. Components threshold value may need to be added, removed, and modify in real time to satisfy new product requirements in industry. The execution platform may also need to be upgraded, oftentimes with new computing and communication hardware and software. This trend calls for reconfigurable embedded system, software that reuses, modify existing hardware components to generate the control software for new applications very quickly. This will, in turn, enable low-cost product development and Maintenance. So our work aims to design a well-defined architecture for simply using and reconfiguring the embedded devices through remote configuration via simple reconfiguring commands.

2. Related Work

José Cecilio and Pedro Furtado aims at designing a well-defined MidSN, standard components and formats exist that are followed by any node and in order to deploy a system architecture for deploying and configuring the servers and embedded devices with operations at the beginning of deployment, providing configuration flexibility prior to operation through remote configuration. The proposed MidSN architecture builds an intermediate computing layer which will serve as an abstraction hiding the different hardware implementations from embedded devices networked applications.[1]

Qingping Chi, Hairong Yan, Chuan Zhang, Zhibo Pang, and Li Da Xu, design and realizes a reconfigurable smart sensor interface for industrial WSN in IoT environment. This design presents many advantages, First CPLD is used as the core controller to release the restriction on the universal data acquisition interface, and realize truly

parallel acquisition of sensor data. It has improved the sensor data collection efficiency of industrial WSN, Secondly, a new design method is proposed multisensor data acquisition interface that can realize plug and play for various kinds of sensors in IoT environment. The design system applies the IEEE1451 interface protocol standard that is used for smart sensors of automatically discovering network.[2]

H. Hinkelmann, P. Zipf, and M. Glesner, design HW reconfiguration by ad hoc reconfigurable devices. a new approach based on the tight coupling of processor with a dynamically reconfigurable function unit which is optimized for wireless sensor network Devices. Dynamic reconfiguration is part of the regular operation mode and the key concept to achieve a small approach that provides sufficient performance, high adaptivity and good energy-efficiency. But it is prepared to be adapted for only prerecorded applications. [3]

C.-L. Fok, G.-C. Roman, and C. Lu, uses mobile agent middleware works for reconfiguration of a WSN implemented entirely in TinyOS. This paper present an in-depth case study of Agilla using a fire tracking application. In this application, mobile agents are deployed to dynamically form and maintain a perimeter around a fire as it spreads through a network comprised of 26 MICA2 motes. This paper makes three primary contributions. First, it demonstrates how a mobile agent middleware can be used to facilitate the development and deployment of a nontrivial application. Agilla able to rapidly create and deploy the entire fire tracking application by injecting 47-byte fire agents and a 100 byte tracker agent. Second a set of application-level performance results that demonstrate the reliability and efficiency of mobile agents and tuple spaces in a highly dynamic application. Finally, it provide new insights into, and lessons about, mobile agent programming techniques for WSNs. [4]

Rossi, G. Zanca, L. Stabellini, R. Crepaldi, A. F. Harris, and M. Zorzi, proposes an approach called SYNAPSE, which was designed to improve the efficiency of the error recovery phase**.** This Paper present an original reprogramming system for WSNs called SYNAPSE, which is designed to improve the efficiency of the error recovery phase. SYNAPSE features a hybrid ARQ (HARQ) solution where data are encoded prior to transmission and incremental redundancy is used to recover from losses, thus considerably reducing the transmission overhead. For the coding, digital Fountain Codes were selected as they are rateless and allow for lightweight implementations.[5]

Hagedorn, D. Starobinski, and A. Trachtenberg, provide a detailed description of the implementation two new rateless-based OAP protocols. Shed light on the various trade-offs that arise in implementation of rateless OAP on a sensor networks, such as the tradeoff between the size of program pages and the size of the underlying finite field used for computation. It provide extensive numerical results evaluating the performance of protocols, based both on real network experiments with Tmote Sky sensors and also on simulations.[6]

3. Proposed System

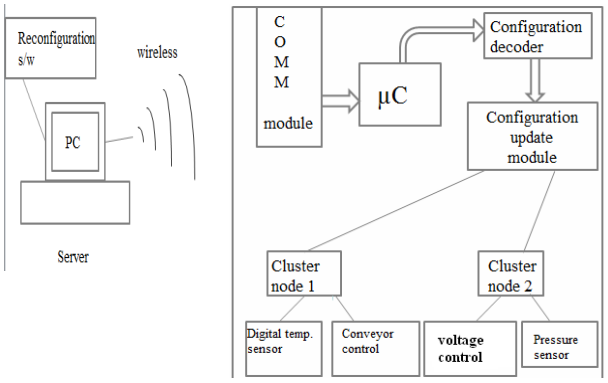

Fig 1. – System Architecture

In Industrial control system, Embedded systems and sensor network plays crucial part. Due to their growth, embedded systems are generally for particular resource constraints task and it is therefore difficult to reconfigure control systems on embedded platforms.

Considering these problems, this project presents a low-cost, reusable, reconfigurable platform that enables integrated design and implementation of Industrial embedded control systems. To minimize the cost and software packages in the form of (application programming interface) API is used. Through this API, only simple is transferred to the industrial embedded AVR based control system or 8051 control system .The drivers for interfacing server with several communication protocols including serial, and Zegbee wireless communication are developed.

Many Experiments we will conduct to test the developed embedded platform. With this platform, it will possible to perform all phases of the development cycle of embedded control systems in an industrial environment, thus facilitating the reduction of development time and cost

with simple reconfiguring commands. Also, to enable collective control & reconfiguration of the entire set of industrial devices such as conveyor belt movement, voltage output level at various nodes, exhust system redirection, machine switching etc.with motor rpm sensor, pressor sensor, humidity sensor etc, a protocol will have to be designed wherein various codes can be assigned to various machine parameters, and via these codes, the various new configurations can be applied. To implement this protocol scheme, encoder module software that runs on the server will have to be designed. Also, at the industry side, a microcontroller based system that receives, decodes, and implements new configurations over the embedded devices will be designed.

3.1 Expected Outcome

Main contribution in this paper will be lies in separating concerns in controller software development at the software architecture level, so that different aspects of controller software can be configured/reconfigured independently and after implementation. In our architecture, software reconfiguration as well as hardware reconfiguration are separated from each other and can be done independently to each other. This enables users to reconfigure remote places embedded devices in industrial control system easily without much knowledge of programming. By giving some simple commands.

The design for post implementation reconfiguration reduces development costs as compared with those methods being used in current software that focus on the pre implementation design phase and require replacement upon reconfiguration. The other contributions of this paper will include design of reconfigurable software for a real time industrial control system and making good effects between flexibility, reliability and performance.

4. Conclusions

We have reviewed various technologies and techniques and have come up with the most viable options .These include Clustering of systems based on sensor actuator classification. Using local intranet as a replacement of localized IoT, thus developing a scalable model. Minimization of middleware configuration resulting in a direct configurable cluster system with high level of abstraction. We will develop our own API and end user software to enable reconfiguring of the entire industrial system without the need to reprogram.

References

[1] José Cecilio and Pedro Furtado, “Architecture for Uniform (Re)Configuration and Processing Over Embedded Sensor and Actuator Networks,” IEEE TRANSACTIONS ON INDUSTRIAL INFORMATICS, VOL. 10, NO. 1, FEBRUARY 2014.

[2] Qingping Chi, Hairong Yan, Chuan Zhang, Zhibo Pang, and Li Da Xu, Senior Member, IEEE “A Reconfigurable Smart Sensor Interface for Industrial WSN in IoT Environment,” IEEE TRANSACTIONS ON INDUSTRIAL INFORMATICS, VOL. 10, NO. 2, MAY 2014.

[3] H. Hinkelmann, P. Zipf, and M. Glesner, “Design concepts for a dynamically reconfigurable wireless sensor node,” in Proc. 1st NASA/ESA Conf. Adaptive Hardware Syst., Jun. 2006, pp. 436–441.

[4] C.-L. Fok, G.-C. Roman, and C. Lu, “Agilla: A mobile agent middleware for self-adaptive wireless sensor networks,” ACM Trans. Auton. Adaptive Syst., vol. 4, no. 3, pp. 1–26, 2009, Art. 16.

[5] M. Rossi, G. Zanca, L. Stabellini, R. Crepaldi, A. F. Harris, and M. Zorzi, “Synapse: A network reprogramming protocol for wireless sensor networks using fountain codes,” in Proc. 5th Annu. IEEE Commun. Soc. Conf., 2008, pp. 188–196.

[6] A. Hagedorn, D. Starobinski, and A. Trachtenberg, “Rateless deluge: Over-the-air programming of wireless sensor networks using random linear codes,” in *Proc. IEEE Int. Conf. Inf. Process. Sensor Networks*, Apr. 2008, pp. 477–466.

[7] E. Monmasson and M. N. Cirstea, “FPGA design methodology for industrial control systems—A review,” *IEEE Trans. Ind. Electron.*, vol. 54, no. 4, pp. 1824–1842, Aug. 2011.

[8] A. Rowe, M. Berges, G. Bhatia, E. Goldman, R. Rajkumar, L. Soibelman, J. Garrett, and J. Moura, “Sensor Andrew: Large-scale campus-wide sensing and actuation,” *IBM J. Res. Develop.*, vol. 1, pp. 1–6, 2010.

[9] C.-L. Fok, G.-C. Roman, and C. Lu, “Agilla: A mobile agent middleware for self- adaptive wireless sensor networks,” *ACM Trans. Auton. Adaptive Syst.*, vol. 4, no. 3, pp. 1–26, 2009, Art. 16.

[10] M. Rossi, G. Zanca, L. Stabellini, R. Crepaldi, A. F. Harris, and M. Zorzi, “Synapse: A network reprogramming protocol for wireless sensor networks using fountain codes,” in *Proc. 5th Annu. IEEE Commun. Soc. Conf.*, 2008, pp. 188–196.