IJCSN International Journal of Computer Science and Network, Volume 4, Issue 1, February 2015
ISSN (Online) : 2277-5420 www.IJCSN.org
**Impact Factor: 0.417**



# A Survey on Unknown Disaster Scene with the help of Bayesian logical Algorithm Using Rescue Robot

**[1] Shraddha Malewar, [2] Hemlata Dakhore**

[1] Department of Computer Science and Engineering, G.H. Raisoni Institute of Engineering & technology for Women's
Nagpur, Rashtrasant Tukadoji Maharaj University
Nagpur, Maharashtra, India

[2] Department of Computer Science and Engineering, G.H. Raisoni Institute of Engineering & technology for Women's
Nagpur, Rashtrasant Tukadoji Maharaj University
Nagpur, Maharashtra, India

**Abstract -** The search and rescue robot's main goal is to search for any survivor's in a disaster situation. The course will resembles a miniature of what a disaster situation looks like after an earthquake. We proposed rescue robot to make it getting smarter, safe path from itself to the targets by path planning. We are making a semi-autonomous control rescue robot which allow human operator to share and make such decision like navigating victims, condition like exploration and searching the victims in disaster environment like earthquake. The proposed design a WSN base Urban search in environmental disaster's scenes using rescue robot disasters create emergency situation to provide basic for victims found using multisensory fusion-based detection approach for detecting alive human services to the victims must be coordinates quickly this project proposed for No. of technologies detection for victims mobile robot performs cooperative simultaneous human body localization function and communicate over the WSN.

**Keywords -** *Semi-Autonomous Controller, Bayesian Logical Method, Hierarchical Reinforcement Learning, Mapping and Localization.*

## 1. Introduction

In disaster situation, there is one of most challenging rescue and search operation is performed. This is extremely difficult not only highly cluttered but also unstructured nature of the environments. In addition, in some scenario the task of rescuing victims from collapsed structures can be extremely hazardous due to asbestos and dust, generally instability of damaged structures, and some cases, presence of toxic chemicals or radiation in the environment, Moreover, very time consuming (e.g. requiring to create larger opening by removing the rubble first) for rescue workers. To overcome these challenges, mobile robotic system is being developed to aid rescue workers in urban search and rescue operations. Current application of rescue robots require a team of rescue operators to remotely guide robot while also searching for victims in such complex environment can be a very stressful task, leading to both conjective and physical fatigue, consequently ,operators can suffer low level of alertness, lack of memory and concentration during these time critical situations.

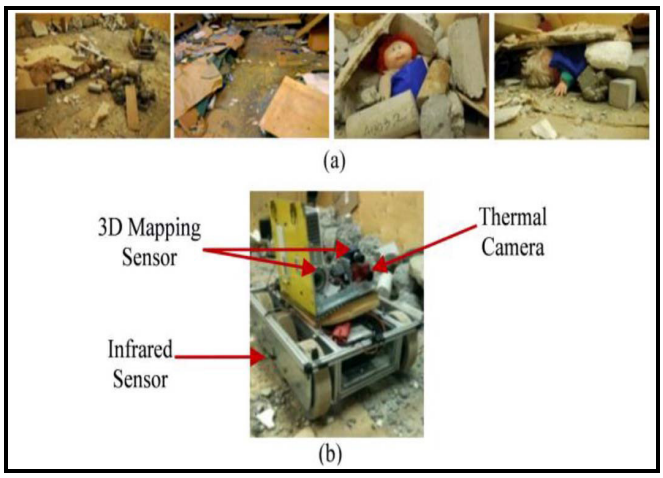


Fig.1: Example for unknown Disaster environment and rescue robot used in earthquake disaster like situation [1]

## 2. Related Work

The author [1] proposed the development of unique hierarchical reinforcement learning based controller which is semi-autonomous architecture view for a rescue robot to search for victims. And also explore the environment which is cluttered. It also proposed to overcome the both the limitation of teleoperational robot as well as fully autonomous robot. They make a robot which is equipped with real-time 3-D mapping sensors, five infrared sensors, and a thermal camera (Fig. 1). In this, using the real-time 3-D mapping sensors utilizes an active structure of victims.

The author [2], proposed the general reservoir computing (RC) learning framework that can be used to learn navigation behavior for mobile robot simple and complex unknown partially observable environment. The learning multiple behavior is possible because the dynamic robot behavior consisting of a sensory motor sequences can be linearly discriminated in the high dimensional non linear space the dynamic reservoir. The author Luo, R.C., Chun Chi Lai [3], proposed the investigation focuses on the synergetic fusion of multiple sensors for an intelligent service robot that only performs self-localization and mapping but also detects moving objects or people in the building it services. This RGB-d camera used in the rescue robot for localization, navigation and path planning. To improve the reliability of the transformation estimates, we introduce a beam –based EEM that allows us to evaluate the quality of a frame-to-frame estimate. They are using the 3D mapping concept for detecting and visualizing the nature, activity of victims.

The author Mike Peasgood, Michael Clark, John McPhee [4], they proposed the multiphase approach for path planning problem. In this the graph and spanning are used to represent as well as maintain free path for obstacles for each single robot to target their destination. There will be saleable and linear the cost of computation with their complex nature and path. We make the path planning foe 100 robots, simulated in an underground mine environment which is less than 1.5 s with a 1.5GHz processor.

## 3. Proposed Design

We are making the single semi-autonomous recue robot controller for developing the various tasks. We design the robot for earthquake rescue and for traversing pipes with various cross-sectional shapes. Earthquake rescue is a very dangerous, difficult and challenging asking which emergency Services rescue people who are trapped in man-mad structures. The disaster areas, for find the victims and help them as fast as possible. Disaster comes many obstacles for the rescue team that makes it hard for them to reach the victims. The rescue operation in urban disaster scenes are extremely challenging due to the highly cluttered and unstructured nature of these environment [1] .A rescue robot is a robot that has been designed for the purpose of aiding rescue workers, common situation that employ rescue robot are mining accidents, urban disaster, hostage situation, and exploration.

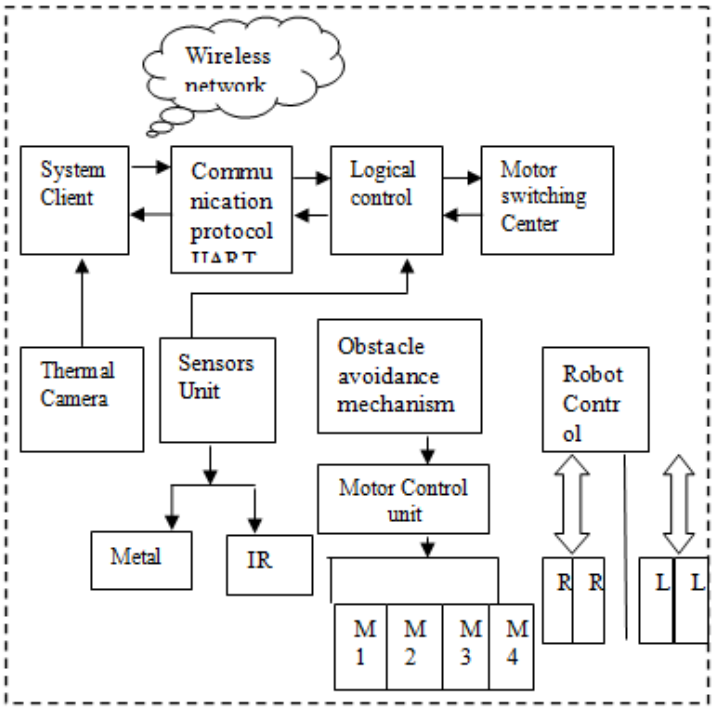


Fig. 2: Block Diagram of rescue robot used in earthquake like disaster urban search environment

### 3.1 Bayesian Logic Algorithm

We are using the Bayesians logical technique which deals with that deal with probability interference using the knowledge of prior events to predict future events for decision making and inference statistics. Baye's theorem provided, Bayes' theorem is a mean of quantifying uncertainty based on probability theory, the theorem a rule for refining an hypothesis by factoring in additional evidence and background information, and leads to a number representing the degree of probability that the hypotheleadsis is true . In this we are using the concept of probability of victim being present or not. We are using

the probability of a victim being present, p = f (h, s), is based on two features: the existence of human thermal heat signature, h (represent as a binary value), and the size, s, of this heat source. A Probability between 0.3 and 0.7 represents the robot's uncertainty regarding the presence of victims and hence HC is requested [1].

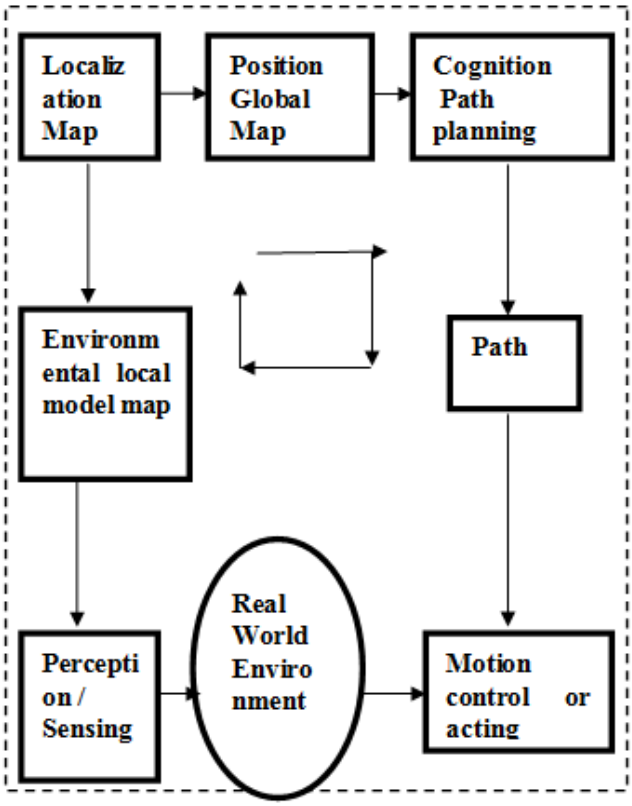


Fig, 3: Architecture of modeling diagram used in semi-autonomous rescue robot

### 3.2 Feature Extraction Algorithm

We are using the feature extraction algorithm foe especially for object reorganization or structure for motion with the help of vision mapping concept, to locate the robot's position, we will use an optical shaft encoder to locate or to calculate how far it travels from base. In order to make the robot to see and to here the world, it will be equipped an IR camera and a microphone. We consider of using GPS to detect the position of the robot but GPS does not provide the accurate location, and it cannot work indoor and it is very expensive to implement. In fig. 3, we are designing a rescue robot which will build a map by itself about the environment. To make a rescue robot getting smarter, we also give it the ability of a navigating a shortest and safe path from itself to the target by path planning.

## 4. Conclusion

In this paper, we make a rescue robot which provides its own unique challenges that the team hopes to succeed in their rescue operations. It represent its self with two main tasks, one is to develop a course for the robot to performed its main task of finding and rescuing humans in a disaster situation, and the second task, the robot will navigate through obstacles with the help of its sensors, camera and its other various mechanical and electrical components.

## 5. Future Work

Future work will consisting of large number of sensors used while making the rescue robot used in various disasters like earthquake. Sensors like sound sensors, infrared, $CO_2$, 3D-mapping sensors used. We will also implementing swarm robotics concept with the addition of giving proper plastic coating; we can use our rescue robot on water also.

## References

[1] Student member, Yugang Liu, Barzin Doroodgar, IEEE and Goldie nejat member, IEEE,"A Learning-Based semi-autonomous controller for robotic exploration of unknown Disaster Scenes While Searching for Victims" IEEE Transaction on Cybernatics'2014.

[2] Jurgen Hess, Felix Enders, Jurgen Sturn, Daniel Cremers, and Wolframe Burguard,"3-D mapping with an RGB-D camera ", IEEE Transaction on robotics, VOL 30, NO. 1, FEBRUARY 2014.

[3] Mike peas good, associate Member, IEEE, Chirstopher Michel Clark, And John Mcphee."A Complete and Scalable Strategy for Coordinating Multiple Robots with in Roadmaps", IEEE Transaction on Robotics, Vol., 24, No. 2, April 2008

[4] Luo,R.C.,Chun Chi lai "Multisensor Fusion-Based Concurrent Enviornment Mapping and Moving object Detection For Intelligent Service Robotics" , IEEE Transaction on industrial Electronics.

[5] Bhatia's., Dhillon. H.S.: Kumar.N."Alive human boby detection system using an autonomous mobile rescue robot", IEEE Conference (INDICON), Annual IEEE 2011.

[6] Z.Zhang., G.Nejat, H.Guo and P.Huaing, "A novel 3-D sensory system for robot-assisted mapping of cluttered urban search and rescue environments ", Intell Serv.Robot, .Vol.4.no. 2. pp 119-134, 2011.

[7] L.A. Jeni,Z. Istenes, P. Szernes, and H. hashimoto, " Robot navigation framework based on reinforcement learning for intelligent space,"in proc.Conferrence human system interaction,Karlow,Poland 2008,pp.761-766

## Author Details

**First Author : Miss.Shraddha Malewar**, completed B.E.i in Electronics and telecommunication in Smt.Radhikatai Pandav college of Engineering in Nagpur and now pursuing M.E 4th sem from G.H. Raisoni college of Engineering and Technology for Women Nagpur, Maharashtra, India. Her research interests are in the area of the Wireless Sensor Network

**Second Author: Miss.Hemlata Dakhore**, completed B.E.in Computer and science in G.H.Raisoni college of Engineering in Nagpur and completed M.Tec in Computer and science from G.H. Raisoni college of Engineering and Technology for Women Nagpur, Maharashtra, India.