IJCSN International Journal of Computer Science and Network, Volume 4, Issue 2, April 2015
ISSN (Online) : 2277-5420 www.IJCSN.org
Impact Factor: 0.417

Battery monitoring and Quota management System

[1] Jaishri Bhagat, [2] Shruti Dharmik, [3] Nikita Upadhyay, [4] Mrunal Katole

[1,2,3,4] Department of Computer Technology, Rajiv Gandhi College of Engineering and Research,
RTM Nagpur University, Nagpur, Maharashtra, India

Abstract - Due to complex architecture of software and hardware combinations included in embedded system many various difficulties are arised.Accelerated development in mobile devices are not accompanied with advancement in battery technology. Consumption of power is an severe affair in mobile devices having android as an open operating system. The total battery time is most concerning issue for users, for example if Wi-Fi or other applications are used excessively in the mobile then it results in fast consumption of energy and ultimately battery gets discharged soon before the specified time. This paper presents a battery monitoring and quota management system which is efficient in sensing and monitoring battery of mobile phone, this is used for displaying the battery status in all modes. The battery monitors any number of cells utilizing a frequency-shift-keyed signal to sequentially investigates each individual cell. This modulated tone responses sends the data back to the monitoring module. This paper introduces the background process. This process provides Powersaver for automated power model construction method that uses built-in battery voltage sensors and information of battery discharge behavior to monitor power consumption. To save overall system's battery consumption, it is critical to monitor the energy consumption of each application.For accomplishing this process acts as a background process and used to monitor battery power for individual application and overall mobile device system . It acknowledges the user about the consumption caused by individual application and it also restricts it if it exceeds the limit.

Keywords - **Powersaver, Mainactivity, Battery Application Monitoring.**

1. Introduction

Embedded systems made an immense development with the recent appearance of open operating systems and newly developing smart phones, various useful and interesting applications are invented to manage and monitor the power consumptions [1]. Examples are from stock tickers to city- wide social games, these devices promise to give support for a large spectrum of applications, many applications such as video-on-demand, and mobile gaming, real-time location-based tracking applications and location-aware mobile social applications comes under heavy network transmission application. As these features forces a abondon workload on the smart phone processors, the display in performing mobile phone services and the wireless network, which in result causes a significant energy cost. Sudden increasing energy demands have not kept pace with advances in battery technology. Almost devices based on android use rechargeable electrochemical batteries for example lithium-ion batteries, as the portable source of energy.These batteries after charged completely can run for only a few hours. For example, if newly exciting games are being played continuosly and whatsapp are used for chatting and sending photos and videos all the time, the android based smart phone can work for only limited time span before it runs out of its energy, this is why the power consumption has became an very major key issue of the energy management of portables devices such as mobile phone.There are already some tools which are capable for analyzing android applications power consumptions, but these tools lack in addressing monitoring of energy consumptions from a developer's standpoint because of which the power consumption has became an major issue of the energy management of portables [3].

To analyze the consumption of power by each application installed in mobile based on Android operating system, a software will be designed which would be capable of enlisting the consumption done by individual application and will monitor accordingly.It can let developers profile android system applications with battery information.

This paper is partitioned in five subparts, where part I gives an detailed introduction, objective and goals. Section II gives theoretical literature survey. Section III consists of entire plan of work in brief. Detailed methodology is highlighted in section IV. Lastly in section V power saver implementer is mentioned .In section VI Results and in VII conclusion and future work are drawn.

2. Literature Review

In literature review the concept of power saver and quota management in android system is mentioned. This concept tells about the android based systems which consumes large amount of battery. In this paper there is the concept of monitoring of battery, which monitors the overall battery consumption in android phones system. There consists the concept about power saver, which is used to monitor the battery consumption. It also shows the start profiler which is consist of views three views i.e. pie, stat and chart view which is further used to calculate the temperature, average and battery consumption. Fangwei Ding, Feng Xia, Wei Zhang, Xuhai Zhao, Changchun Ma aims to monitoring the energy consumption of smart phone is very important issue for saving energy and to extend the lifetime of a battery. In this paper the concept of Smart Energy Monitoring System (SEMO) for smart phone using android operating system is most important [1].

A. Diaz P. Merino and F. J. Rivas's work tells us that how the mobile applications are simplified by telling the awareness in communication, so that application can be of more better functioning in new technology android phones. It gives the overall structure for application level for cut-off issues of networking [2]. The On -line power approximation and generation of model supporting structure is studied as a part of literature survey [5]. The Power estimation tool tells about smart phone developers and users of the power consumption and design. An automated power model construction technique, power booster uses built-in battery voltage sensors and knowledge of battery discharge behaviour to monitor power consumption. They do not provide the application-level energy consumption monitoring but it provides energy consumption monitoring.

This paper tells about A-GPS scheme that search the nearest Wi-Fi network access points (APs) as per user accessible location [6]. When user reaches to the nearest Wi-Fi location it should provide the better Wi-Fi network to user. It also reduces the unnecessary Wi-Fi scan on phone. The energy consumption is most important issue in android phone. Therefore monitoring the energy consumption is most important issue for power saving and to increase the life-time of the battery. Next literature provides the concept of battery energy monitoring [7]. This concept is used to monitor the energy demands and to calculate the amount of battery consumption. It also monitors the activities of individuals.

Another literature focus on the consumption of energy and system capability of android based systems, in other devices the concept of TCP and UDP is referred while performing the video delivery in network [8]. As nowadays the consumption of energy has become the most important issue so that every android phone consists of the new technique to save the energy. Certain paper tells about the improvement in consumption of energy in every application by using GPS and Wi-Fi connectivity [9]. This paper summarize the concept of quota management in which the amount of battery is assign to each application as per user's convenience so as to save energy and to monitor the battery consumption.

.

3. Proposed Plan of Work

The device and enhancement of Powersaver which is used for battery monitoring and analysis of an android dependent system is the purpose behind the research work. The block diagram of Power saver is shown in Figure 1. It consists of two components i.e. Start profiler and Installed application list. Firstly, Start profiler begin the application and also gives the chart view of the battery voltage and the record of all the applications in the device with percentage battery usage are supplied by installed application record. The computation of battery consumption is performed by Power saver and it can be executed in two modes i.e. standby mode and in active mode. The voltage and temperature of the battery is provided by chart view and it also give the percentile usage of the CPU and battery of the installed application in our anroid devices . Log files are generated to provide the descriptive information about battery, estimated battery health, battery status and power of the battery. The Message gives the detailed log information about date and time in the application that is installed into our devices.

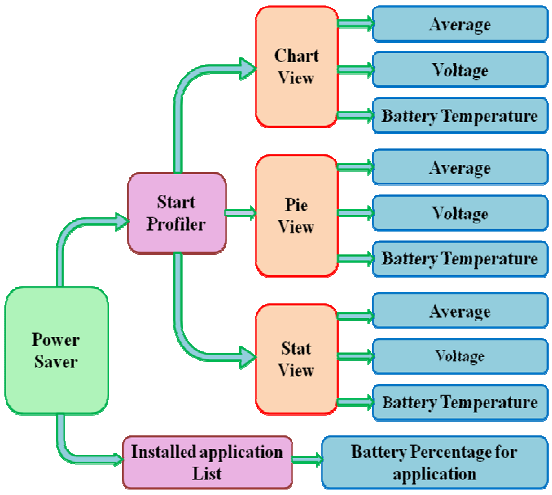

Figure 1. Block diagram of Power saver

4. Methodology for Battery Monitoring

The tactic used for designing and instigating is given below. Initially log file is created using background process. Succeedingly, the powersaver calculates totals battery percentage, temperature of the battery, and time

hour calculation and application consumption of battery (battery application monitoring).

4.1 Background Process

The charge status of the mobile device is designated by the battery and illustrate the battery proportion in the status bar.The battery application is designed to track the current usage of the battery as well as the percentile of the application on the anroid device, and still operate as a battery saver. Power saver is a background application, which will begin when the application is installed in the device. A log file is created for each deed by means of Power saver and on the base of log file, the total battery and particular application is evaluated by Power Saver. Various log file are created by various application. The various names are Android.log, Whatapp.log, Mainactivity.log, Screensaver.log,syncmds.log, Sns.log, Maps.log,which are the log files generated and used for specific functions.

4.2 Battery Calculations

The three modes in which the battery is calculated are fundamentally Active, Service and Standby. Service mode utilizes extra battery than in the other two modes Active and Standby mode, for instance a facebook notification. The CPU and battery usage of the installed application in the mobile gadgets with percentages granted in the Standby mode. The following formula is used to analyze the suitable standby battery magnitude:

$$C = [(I0 \times T0) + I1] \times 1.25 \qquad (1)$$

Where,
I0 (Standby current of lithium-ion battery)
T0 (Standby time, assume category L0)
I1(Full current lithium-ion battery)
First multiply I0 by T0 Then add on I1 Then multiply the whole by the aging factor (1.25).C would therefore be in Amp hours.

4.3 System Consumption

In this method it evaluate the total battery and time hour calculation of the battery. It is electrons that are stored in the battery. In that the determine of charge is the coulomb and that a single electron has 1.602e-19 coulombs of charge. One amp flowing in a wire for one second will use one coulomb of charge, which is 6.24 x 10^18 electrons.

$$Q = I*t \qquad (2)$$

Where Q is the charge in coulombs, I is the current Amp hours mean amps times hours.

Divide by amps and we obtain hours, divide by hours and we get amps. So it isn't amps, and it isn't amps per hour, it is amp-hours. In amps and t is the time in seconds. Amp hours are how a large amount charge is stored in the battery, since the battery change voltage during the release. Multiplying the average or formal battery voltage times the battery capacity in amp hours gives an estimation of how a lot of watt-hours the battery contains.

$$E=C*Vavg \qquad (3)$$

Where E is the energy stored in watt-hours and C is the capacity in amp-hours. Vavg is the average voltage during discharge. Watt-hours are a part of energy.

Energy is usually recognized as a key blockage for embedded sensor nodes. This stoppage is aggravate by the inequjality between the quickly growing processing speed and the slowly improving battery capacity of computing systems. Energy virtualization is therefore of increasing significance to partition the barrier resources appropriately, when multiple independent applications share a self-support platform. Previous research that addressed the energy barrier conservate on energy maintain access in wireless sensor networks that minimize energy consumption.

4.4 Convert Watts To Amps

Watts is the fundamental unit of power and watt-hours are the energy stored
Watt-hours = watts * hour (4)
Watt-hours = watts * hours / efficiency (5)
Watts = amps * volts (6)
The key in is to use the watts for calculating the amps at the battery voltage. Explanation for the efficiency of the Battery Divide the watt hours by the voltage of the battery to obtain amp hours of battery storage. Unlike voltage battery the amp hours will change by dividing it by the battery voltage.

4.5 Installed Application Battery Consumption

In android system application consumption is more through display, speakers, mike, Wi-Fi devices, and sensors.Android tracks events that affect battery usage and stores the information in batterystats.bin file.

For example the length of time when the screen was "on" with a specific brightness setting, which android application is running and how long held a weak lock (prevents device from sleeping), Use of CPU per process (i.e. In Android application process), The strength of phone signal, Use of GPS, etc.

Android computes calculation of power for each Application or component (e.g. Screen) users based on configuration information included on the device. Battery percentage for application is calculated by using load on the CPU, Stime and Utime of this application and the memory usage of this particular application.

Battery calculation contains several fields with the help of which total battery consumption takes place. Battery calculation is basically calculated in three modes that are Active, Standby and Services, where Service mode consumes more battery than active and standby mode; for example Facebook notification. In the Standby mode process provides the CPU usage and battery usage of the installed application in the device with percentage.

4.5.1 Total Battery

Ohm's equation exposed the mathematical relationship between current all the way through a resistance and power indulgence, which is known as Joules law. These power equations are usually related with the ohm's law equation ,voltage, current and resistance. Power equations is as given below :

$$P=I^2 R \quad (7)$$
$$P=IE \quad (8)$$
$$P=E^2 /R \quad (9)$$

Power calculate in watts can be symbolized as "W". The overall battery watt estimation by using the above formulas shows the result equation above.

4.5.2 Time Hours Calculation

The efficiency and battery existence are calculated on the basis of time hours estimation. Battery existence depends on the efficiency of battery, frequency analysis of load, type and model of battery. For this reason we need the volume of the battery in amp-hours and efficiency of batteries. The formula is as given below:

$$Pin=Pout/eff \quad (10)$$
$$Iin=Pin/12V \quad (11)$$

The capability of a battery is usually rated in terms of volts and amp-hours .The output voltage declines when battery releases. Similarly, the output voltage will fall under increasing weight. The amp hour capacity is made at a identified rate of release awaiting the output voltage doorsill for unlike battery types, as unlike creates want to blow up unlike numbers. System consumptions calculate the total battery and time hour estimations of the battery. It is electrons that are stored in the battery. In that the measure of charge is the coulomb .

4.5.3 Application Battery Consumption

In android system application consumption is more all the way through display, speakers, mike, Wi-Fi devices, and sensors. Android paths events that influence battery tradition and stores the information in batterystats.bin file. For example the distance end to end span of time when the screen was "on" with a precise brightness situation, which android application is running and how lengthly detained a weak lock (prevents device from sleeping), Use of CPU per process (i.e. In Android application process), The force of phone signal, Use of GPS, etc. Android computes estimation of power for each Application or constituent (e.g. Screen) users based onpattern information included on the device. Battery percentage for application is calculated by using weight on the CPU, S time and U time of this application and the memory usage of this particular application. Battery estimation contains more than a few fields with the help of which total battery consumption takes place. Battery estimation is essentially calculated in three modes that are Active, Standby and Services, where Service mode consumes more battery than active and standby mode; for example Facebook notification.

In the Standby mode process provides the CPU tradition and battery tradition of the installed application in the device with percentage. Battery statistics can be surplus from the device using: adb shell dumsys battery info. In battery consumption application background process name as power saver is calculated the log file of each application. The log file generated continuously for the particular application it means the fiber of that application is activated. Starting the thread is in sleep mode. Utilize time calculate the time of active fiber and the value of exploit time for that particular application is increased. According to that thread and exploit time, we can calculate the application battery consumption.

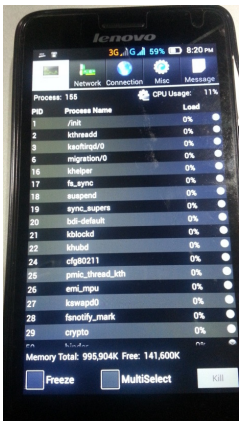

Figure 2. Screen shot of Process view.

Figure 2 shows the process view. The procedure of the battery calculation done by the background process gives us the total battery and each application list and how much battery it consumed.The work of activity is to calculate battery in percentage, which can be seen in the installed application list each assigned with the unique process identification number (PID). Battery calculation process contains information regarding for example; PID, process name, and load on the CPU, total CPU usage, total memory, free memory, utilize time of application, a background running thread of the application and the main important battery usage of the particular application.

5. Power Saver Implementation

Java programming language is been used for designing the system explained above. The development of this application is done on Android SDK(software development Kit) with the help of eclipse integrated environment with the ADT. (Android development tool) plug-in for eclipse. Samsung smart phone based on android based operating system is used for testing of the powersaver and quota management system.

Background Process Implementation

The background process runs simultaneously when the system is activated. Its main purpose is to calculate the total battery power and the temperature of the battery. It creates and maintains the log file of each application. Generated log files of individual applications are then stored in the big array and they activates the background threads of each individual application. So many android based applications are in trend nowadays which can be installed in embedded devices. If we consider any applications having an GUI whose components need display,internet,mike etc and another type is applications services.While the application is in running mode we can find out the average utilization time af all the components required in that particular application.All the calculated information is then stored into the log files.

We named the procedure of calculating battery information of components required in GUI application as powersaver.This is entirely an background procedure.The system designed enlists the individual applications installed in the device and consumption of each application based on the components used in GUI.

A. Battery calculation Implementation

In background process we named as power saver battery calculation will get.This will display us the information regarding the total battery state and will also enlist individual consumption of application.Start profiler will begin the procedure of calculation of consumption of power of all applications repectively.Then the main activity begins the calculation percentage wise battery consumed of application which will be displayed in installed application list, which can be viewed by the help of application viewer and system viewer.

6. Results of Work

The process of calculation is done by using number of basic formulas.The displayed view will look as given below. In the Figure 4: We can see the Stat view of power saver, including fields like process, network, connection Misc and message. It gives the various view of battery calculation which gives the scaling and frequency range of lithium-ion battery, it provides us with the status of battery charging or discharging, health is good or critical, capacity, voltage in mv, temperature in Celsius and farad, AC power and USB power in both mode offline or online.

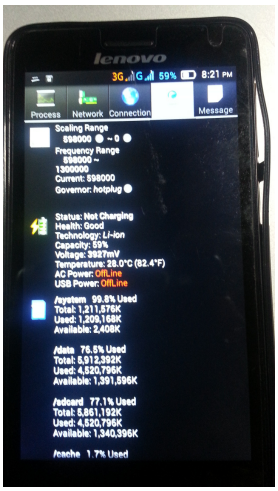

Figure 3. Stat View of Powersaver

The another view which we can see in GUI is message view of battery calculation. This tab includes the log file of each application installed in the android based mobile device generated earlier by the background.The information stored in the log file is kept on updating each second or in every activity perform in the system. It also includes the updated date and time activity.

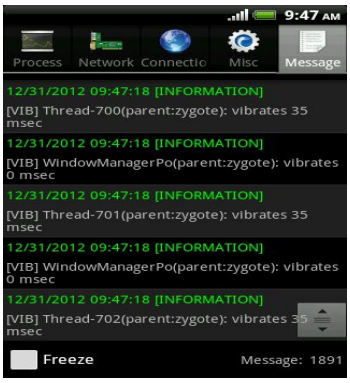

Figure 4:Message View

7. Conclusion

The energy consumption and saving of battery usage of Android devices has become the most important issue now days. This application can be developed to save energy and to monitor and analysis of energy consumption of applications on Android devices. With the help of system software, the Android operating system will be able to record the energy consumption of the application in active mode.

The main objective of this is to minimize and alter energy sources problems on Android devices. The overall battery and application battery consumption, CPU usage application, and background thread applications details can be provided by this Battery consumption application. Consumption of battery by individual application by restricting extra usage alerts can be send to user. Analysis of application battery consumption by comparing battery usage of individual applications of mobile phone and Android devices can also be done. Future work is development of a battery Quota system which will set limits for specific application and to provide automatic control on closing some application which is responsible for extra consumption of the battery. Definitely will work positively on the advanced consumption issue of battery of Android system and makes it useful for saving energy and battery of the system.

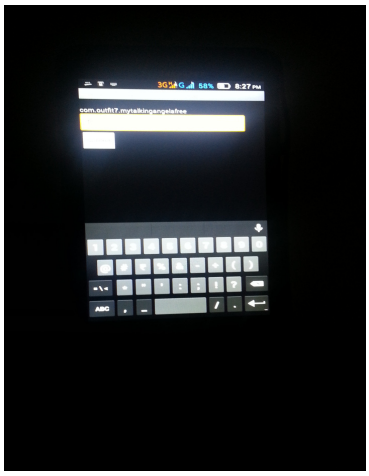

Figure 5: Quota Management

The above figure depicts the concept of quota management in which we can assign the amount of battery percentage wise for every application as per users convenience. Once the limit exceed that application automatically get closed. For example when we travel we need to save battery to prevent the device from getting completely discharged. We can use the application to conserve battery and set the limit for each individual application installed in the smart phone based on android operating system.

References

[1] Fangwei Ding, Feng Xia, Wei Zhang, Xuhai Zhao, Chengchuan Ma "Monitoring energy consumption of smartphones" in 2011 IEEE international Conferences on internet of things, and Cyber, Physical and social Computing,2011.

[2] A. Diaz, P. Merino, and F. J. rivas, ”Mobile application profiling for connected mobile devices,”IEEE Pervasive Computing,vol.9, Aug.2009,pp.54-61, doi:10.1109/MPRV.2009.63.

[3] Yu Xiao, R. Bhaumik, Zhirong Yang, M. Siekkinen, P. Savolainen, and A. Ylä-Jääski, "A system-level model for runtime power estimation on mobile devices," 2010 IEEE/ACM International Conference on Green Computing and Communications (GreenCom) & 2010 IEEE/ACM International Conference on Cyber, Physical and Social Computing (CPSCom), IEEE Press, Dec. 2010, pp. 27-34, doi:10.1109/GreenCom.2010.114.

[4] I. M. Taylor, and M. A. Labrador, "Improving the energy consumption in mobile phones by filtering noisy GPS fixes with modified Kalman filters," 2011 IEEE Wireless Communications and Networking Conference (WCNC), IEEE Press, Mar. 2011, pp. 2006- 2011, doi:10.1109/WCNC.2011.5779437.

[5] Lide Zhang et al., "Accurate online power estimation and automatic battery behavior based power model generation for smartphones," International Conference on Hardware/Software Codesign and System Synthesis (CODES+ISSS'10), IEEE Press, Oct. 2010, pp. 105-114

[6] Feng Xia, Wei Zhang, Fangwei Ding, Ruonan Hao, ”A-GPS Assisted Wi-Fi Access Point Discovery on Mobile Devices for Energy Saving", IEEE Global Information Infrastructure Symposium (GIIS 2011), August 2011, Da Nang, Vietnam.

[7] I. Crk, F. Albinali, C. Gniady, and J. Hartman, "Understanding energy consumption of sensor enabled applications on mobile phones," 31st Annual International Conference of the IEEE Engineering in Medicine and Biology Society (EMBC), IEEE Press, Sept. 2009, pp. 6885-6888, doi:10.1109/IEMBS.2009.5333609.

[8] A Carroll and G. Heiser. ”An analysis of power consumption in a smart phone," in USENIXATC'10: Proceedings of the 2010 USENIX conference on USENIX annual technical conference. Berkeley, CA, USA: USENIX Association, Jun. 2010, pp. 21-34.

[9] Ramona Trestian 1,Arghir-Nicolae Moldovan2,Olga ormond1,Gabriel-Miro Muntean, ”Energy consumption Analysis of Video streaming to Android Mobile Devices," 2012 IEEE International Conference,2012.

[10] D. N. Rakhmatov and S. B. K. Vrudhula, "An analytical high-level battery model for use in energy management of portable electronic systems," Proc. 2001 IEEE/ACM Int'l Conf. Computer-Aided Design, IEEE Press, 2001, pp.488-493, doi:10.1109/ICCAD.2001.968687.