IJCSN International Journal of Computer Science and Network, Volume 5, Issue 2, April 2016
ISSN (Online) : 2277-5420 www.IJCSN.org
Impact Factor: 1.02

Characteristics & Applications of Different Types of Dampers as Seismic Energy Dissipater

[1] Dharmesh Chandnani, [2] Riddhi Joshi, [3] Kumarpal Trivedi

[1,2,3] Civil Engineering Department,
A D Patel Institute of Technology, New Vallabh Vidyanagar, Gujarat, India

Abstract - During an earthquake the principal attack on a structure is by horizontal force in different directions. The resistance of the structure against earthquake depends on elastic strength, inelastic deformability, damping capacity or a combination of all. In recent years there is a considerable research and development of structural control devices to control seismic response of buildings. Many vibration-control measures like passive, active semi-active and hybrid has been developed. Dampers served as one of the most effective active systems. There are many types of dampers and based on that, their efficiency – effectiveness varies.

Keywords - *Dampers, Seismic Energy, Dissipation, Earthquake, Structure, Friction, Viscous, Yielding, Magnetic and Tuned Mass Dampers.*

1. Introduction

In seismic structures upgrading, one of the lateral force reduction caused by the earthquake is use of dampers. During an Earthquake high amount of energy is applied to the structure. This energy are in the form of kinetic or strain energy. This energies are either absorbed or transferred to the structure. Damper is basically a device which dissipate kinetic energy. It is a type of Active Control Device for Earthquake Resistance. It does not detach the sub structure and super structure but it absorbs the vibration or shock received from seismic energy. The damper used for Earthquake Resistance Devices can be also called as SEISMIC DAMPERS.

2. Types of Seismic Dampers

i) Friction Dampers.
ii) Viscous Dampers.
iii) Yielding Dampers (Hysteretic, Metallic, X-Plate or Elasto-Plastic).
iv) Magnetic Dampers.
v) Tuned Mass Dampers (TMD)(harmonic absorber)

2.1 Friction Dampers

It is the most effective, reliable and economical mean to dissipate energy. Here, the seismic energy is spent on friction between the rubbings of surface with each other. Much greater quantity of energy can be disposed of in friction than any other method (Viscous damper or Yielding damper). There is very less effect to the performance of frictional damper due to change in temperature, velocity etc. Due to its simple behavior and easy installation it is converted to one of the most common type of damper. Figure[1]is of rotational friction damper (example of friction damper). It can be used during seismic strengthening of existing buildings. It is low cost and requires no maintenance.

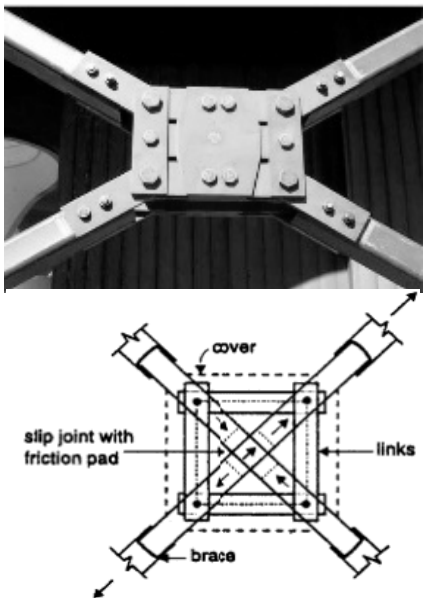

Fig. 1 : Friction Damper[8],[9]

2.2 Viscous Dampers

Viscous damping is a way to add energy dissipation to the lateral system of a building structure. A Viscous damper dissipates energy by pushing fluid through an orifice, producing a damping pressure which creates a force. This provides a significant decrease in earthquake force or seismic energy. The addition of viscous dampers to a structure can reduce horizontal floor accelerations and lateral deformations by 50% and sometimes more. The viscous damper for structures is shown in Figure [2]. It is similar in action to the shock absorber on an automobile, but operates at a much higher force level. It is made up of steel so it is a durable material. The damping fluid is silicone oil, which is inert, non-flammable, non-toxic, and stable for extremely long periods of time. Due to ease of installation, adaptability also diversity in their sizes, viscous dampers have many applications in designing and retrofitting.

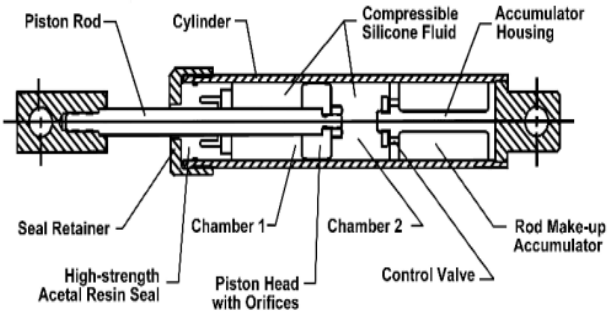

Fig. 2: Details of viscous damper system [2]

2.3 Yielding Dampers

In this damper, transferred energy to the structure is spent to submission and non-linear behavior in used element in damper. In these dampers, metal inelastic deformation is used such as for formability metals such as steel and lead for energy dissipation. In braces, using submission metallic dampers is more common. These dampers are often created by some parallel steel plates. And in combination with a bracing system, they undertake the role of absorption and energy dissipation.

This part of bracing can acts as a fuse in structure. X-shaped metal dampers have a significant performance. These dampers have a high lateral stiffness, in addition to providing damping. So, they were entitled as Added Damping and Stiffness (ADAS).

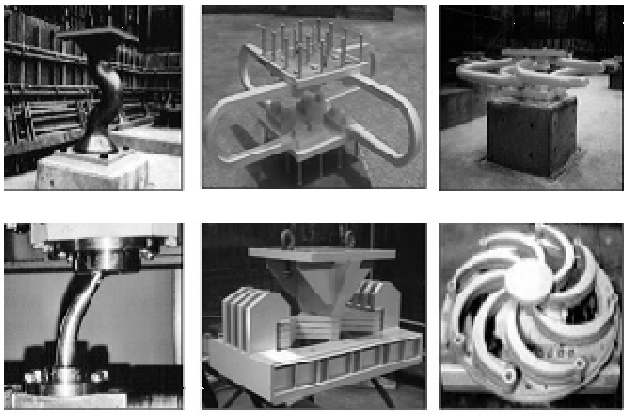

Fig. 3 : Samples of yielding dampers [1]

2.4 Magnetic Dampers

Electromagnetic damping with quad NdFeB magnets is not expensive, and not temperature dependent. It is clean, dead easy to adjust and very effective. The magnetic damping is not so strong, so that it is effective in dynamic vibration absorbers which require less damping. The damper is composed of two racks, two pinions, a copper disk and rare–earth magnets. When a relative linear motion is made between two rod ends, the copper disk rotates because of the racks and pinions.

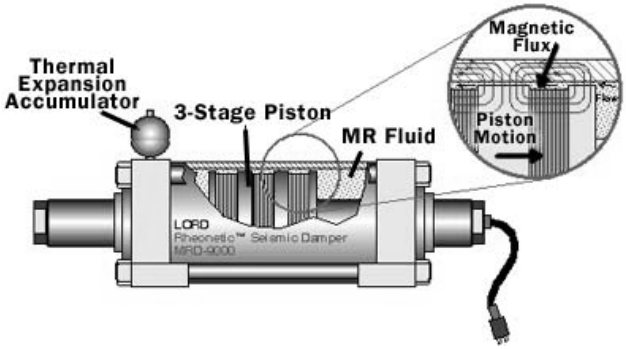

Fig. 4 : Magnetic Damper [6]

2.5 Tuned Mass Dampers

It is made-up of a mass and a spring attached to the structure. It works on principle of frequency i.e. harmonic motion. It reduces mechanical vibrations by resisting resonance frequency. It comprises of

i) Large oscillating mass
ii) Spring
iii) Visco-damper.

The components are light weight which acts as a spring and reduces amplitude of large vibrations drastically. The classic example for a building can be given by referring Taipei 101.

Table 1: Dampers and their characteristics

Type of Damper	*Mode of Energy Absorption*
Friction Dampers	Energy is absorbed by surfaces with friction between them rubbing against each other
Viscous Dampers	Energy is absorbed by silicone-based fluid passing between piston-cylinder arrangement
Yielding Dampers (Hysteretic, Metallic, X-Plate, Elasto-Plastic)	Energy is absorbed by metallic components that yield. large initial stiffness and high bearing capability. Low cost, Good ductility.
Magnetic Dampers	Energy is absorbed due to magnetic induction
Tuned Mass Dampers	It resist resonance frequency oscillations using springs, fluid or pendulums.

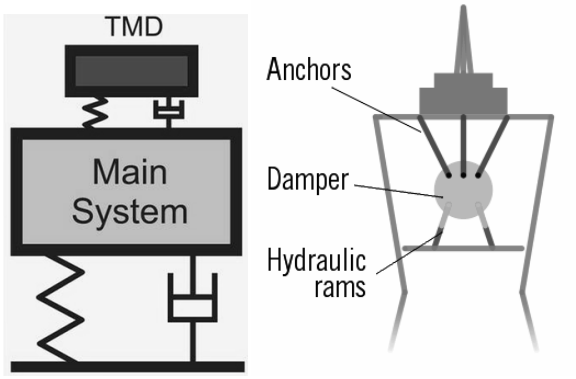

Fig. 5 : Tuned Mass Dampers [10],[11]

Table 2: Dampers and their applications

Type of Damper	*Application*
Friction Dampers	As a Bracing, Retrofitting of building, low cost
Viscous Dampers	Automobile, Bracing in buildings, with base isolators, Bridges
Yielding Dampers (Hysteretic, Metallic, X-Plate, Elasto-Plastic)	To reduce the seismic response of inter-story drift
Magnetic Dampers	Energy is absorbed due to magnetic induction
Tuned Mass Damper	Transmission line, Automobile, Tall buildings, Spacecraft

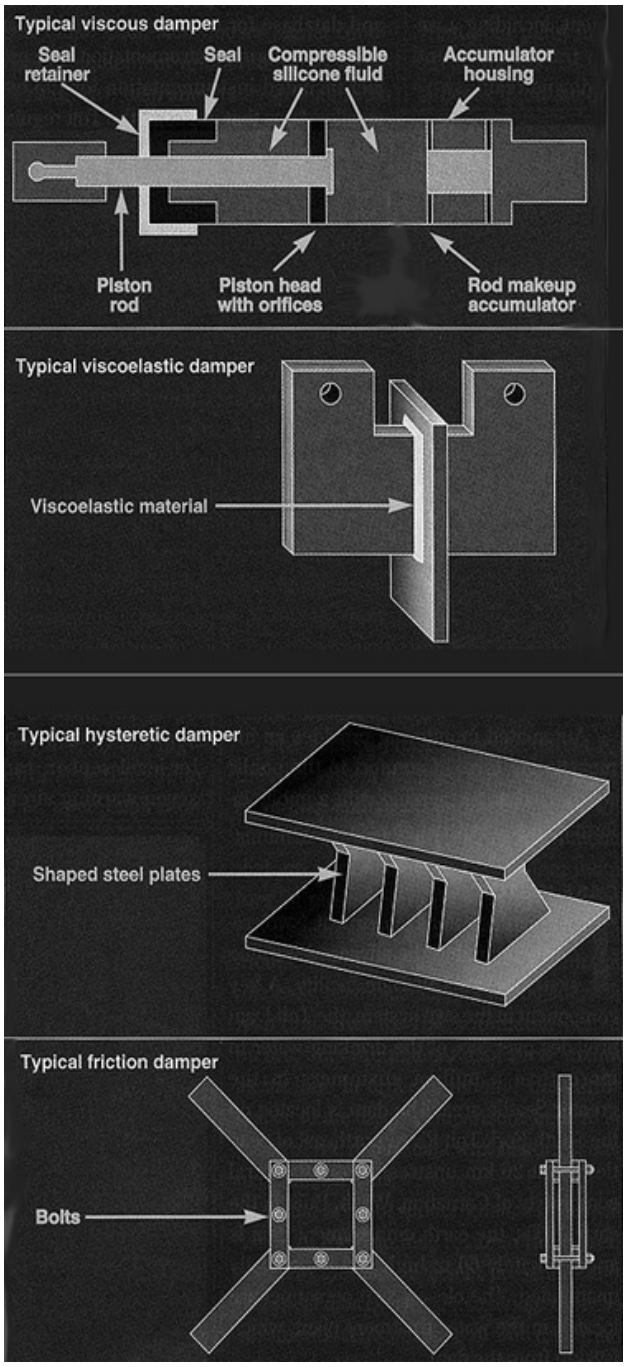

Fig. 6 : Different types of Dampers [7]

3. Conclusion

1) The incorporation of damping elements can often significantly improve performance.
2) The performance to cost ratio is more in structures where dampers are provided.

3) Dampers requires regular maintenance to work effectively.
4) The Damper technique effectively reduces stress on concrete and reinforcement.
5) Dampers can have isolation in all 6 degrees of freedom which the passive system cannot have.

References

[1] Alireza Heysami, Types of Dampers and their Seismic Performance during an Earthquake. Current World Environment, Vol. 10(Special Issue 1), 1002-1015 (2015).
[2] Douglas P. Taylor, President History, Design, and Applications of Fluid Dampers in Structural Engineering. Taylor Devices, Inc.
[3] Robert. D. Hanson, TSU T. Soong; Seismic design with supplemental energy dissipation devices published by Earthquake Engineering Research Institute, 145-156(2003).
[4] Trevor E Kelly Holmes Consulting Group, Damper Design Guidelines, (2001).
[5] Jangid, R.S. Seismic response of isolated bridges, Bridge Engineering, Vol.9, No.2, pp. 156- 166(2004).
[6] https://www.djc.com/news/ae/11151055.html
[7] http://www.counterquake.com/damping.html
[8] http://article.sapub.org/10.5923.c.jce.201401.04.html
[9] IJRET: International Journal of Research in Engineering and Technology eISSN: 2319-1163 pISSN: 2321-7308
[10] http://www.gerb.in/index.php?id=630
[11] http://blog.gergelytakacs.com/post/93090246760/worlds-largest-earthquake-damper-a-tuned-mass.

Author Profile:

Dharmesh Chandnani is pursuing their graduation programme in Civil Engineering from A. D. Patel Institute of Technology affiliated with Gujarat Technological University.

Riddhi Joshi is pursuing their graduation programme in Civil Engineering from A. D. Patel Institute of Technology affiliated with Gujarat Technological University.

Kumarpal Trivedi (B.E. & M.E. Civil-Structures) is an Associate Professor in Civil Engineering Department, A. D. Patel Institute of Technology.