IJCSN International Journal of Computer Science and Network, Volume 5, Issue 6, December 2016
ISSN (Online) : 2277-5420 www.IJCSN.org
Impact Factor: 1.02

Optimal Speed Control of Air Blower in Annealing Furnace for Quality Heat Treatment

[1] Supantha Mandal, [2] Arunava Kabiraj Thakur, [3] Suraj Kumar Saw, [4] Moumita Banerjee, [5] Srijita Das

[1] Department of Electronics & Communication Engineering
St. Mary's Technical Campus Kolkata, India

[2] Department of Electrical & Electronics Engineering
St. Mary's Technical Campus Kolkata, India

[3] Department of Electronics & Communication Engineering
National Institute of technology Arunachal Pradesh India

[4] Department of Electronics & Communication Engineering
Narula Institute of Technology India

[5] Department of Electronics & Communication Engineering
Techno India University, India

Abstract - Optimization of annealing temperature is one of the most critical aspects for reaction specification. If the annealing temperature is too low, it leads to amplification of non specific product characteristics which is undesirable .As a result the microstructure of the metal coarsens, degrades and hampers the standard properties due to less temperature. On the other hand, excessive high temperature may reduce the product yield and quality. This research paper ventures to propose the requirement of a blower in furnace annealing process for quality heat treatment augmenting the efficiency of the procedure resulting in optimal control operation of heat treatment. The highest and lowest temperature limits for iron rod annealing is set and within this range the speed of the blower is controlled by temperature changes due to signal sensing using RTD temperature sensor. The whole process is automated and executed through assembly language programming for automated control of speed of the blower. There will be manual OFF function for proper control and accident prevention if any stoppage due to industrial emergency is required in case of malfunctioning or assurance of safety for smooth conduct of operation is required.

Keywords - *Air blowing mechanism, modeling in 89V51RD2 Microcontroller simulator, Annealing, RTD as a temperature sensor*

1. Introduction

Heat treatment of iron rod for enhanced performance is a controlled process used for modifying and altering the microstructure of materials such as alloys and metals to Augment the properties which benefit the component lifecycle. Increased surface hardness, temperature resistance, malleability, ductility, strength and flexibility are various attributes of the metal. The significant heat treatment processes of major types are implemented using annealing, normalizing, tempering and hardening. Annealing is basically a stress relieving process in which material is heated above its upper critical temperature and cooled in the furnace itself.

Annealing process is comprised of three major stages:

Recovery phase: In this phase the metal gets soft by removing the defects in crystal and internal stresses.

Recrystallisation: The new grains which are strain free get nucleated and grow resulting in replacing those deformed by internal stresses.

Controlled cooling process: The process of annealing is carried out after recrystallisation stage that enhances grain growth, prevents detrimental effects like coarsening of microstructures and degradation of metal structural attributes. The maintained controlled cooling process using the oven is left with work pieces. The controlled cooling process demands the necessary deployment of automated blower which leads to efficient annealing procedure of iron rods augmenting the mode of operation for significant results inducing novelty in the mode of operation.

2. Literature Survey

Most of the drives in residential, industrial, commercial applications require speed control of air blower at various stages of production. Depending upon the various applications, some of the systems may be operating on variable voltage and variable frequency control or at a constant and variable speed application [1]. Strength of a cooling or heating system will improve extremely when flow rate of air through the heat transferring unit is maintained at a constant level [2] José Carlos Gamazo-Real et.al described the speed and position sensor less methods for controlling Brushless Direct Current [3]. The

multispeed operation and multipurpose operation are provided by controlling the speed of these motors such as variable speed drives, adjustable frequency drive [4]

3. Purpose Mode of Operation

Our proposed mode of operation is to provide controlled heat treatment by using sensor integration and blower fan speed control for efficient annealing procedure for metals and alloys which will augment the lifecycle of the various metallic substances used in industrial applications. Our major aim is to optimize heat treatment in such a way which will enhance the various properties of metal like surface hardness, temperature resistance control, metallic strength in terms of malleability, flexibility and ductility .Rapid heating and cooling is carried out in our mode of operation to achieve the desired results .The controlled annealing heat treatment involves 3 steps comprised of recovery, recrystallisation and cooling phase implemented by automated blower integration [5]. The temperature range detection and corresponding signal generation is carried out by RTD sensors along with various other electronic components integrated with the microcontroller as the main driving unit which coordinates the entire operation of fan speed enabling controlled cooling and efficient annealing procedure .The manual operation of Fan is completely eliminated due to microcontroller and heat sensors using controlled heating and cooling procedure by the use of various electronic components by reducing the complexity of the operation. This experimentation research and analysis is carried out by using microcontroller providing low power consumption by using MOSFET Technologies and generating high performance. The annealing of iron rod is executed in a controlled technique which minimizes the stress of metallic bodies achieving quality heat treatment

4. Components

4.1 HVAC BLOWER FAN

The temperature sensor mounted on air-conditioning wall may have a control switch for fan with set ON and AUTO set positions. The diameters varies from the range of 180-1000mm and operates generally in 300-400 watt power range. The weight of the fan is nearly 700 grams .The advantages includes noiseless operation, high efficiency, less vibration and high reliability .The ON set position makes the switch enabled for execution of the air conditioning fan initially and the AUTO set positions makes the fan automatically turn on ,adjust the speed or turn OFF when there is no need of cooling .The sensor's temperature limit is set so that when the process is started the ON switch instructs the sensor to operate as the temperature rises above HLS or falls below LLS[7].

Fig. 1. HVAC Blower Fan

4.2 RTD AS TEMPERATURE SENSOR

Resistance Thermometers also known as Resistance Temperature Detectors (RTDs) are the sensors which can be used in temperature measurement in relation with the resistance of the element. The best metal suited for RTDs is Platinum as it follows linear relationship of resistance to temperature in highly repeatable manner over a wide range. Of temperature changes .The novelty of platinum element properties comprises of the ability to become a material of choice for temperature standards over the range of -272.5 °C to 961.78°C.The construction of resistance thermometer includes number of forms ,offering high stability, greater accuracy and repeatability .Resistance thermometers deploys electrical resistance and operates by using a power source .The variation of resistance is linear with temperature and passing of a small current is required through the device to measure resistance under test condition .Heat resistance ,accuracy loss can be caused by this factors affecting the operation .Four-wire connections are also used for the most significant applications[6].

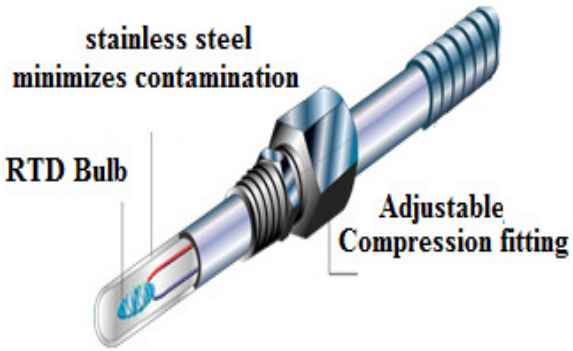

Fig. 2. RTD (Resistance Temperature Detectors)

4.3 ANALOG TO DIGITAL CONVERTER

The 8-bit successive approximation A/D Converters is ADC0804 CMOS which is being used in our control

circuitry for speed control optimizing the performance. These A/D converters act as a memory locations or I/O ports for the microprocessor and eliminates the logic interface requirement .The analog-to-digital converter (ADC) inputs consists of a voltage source which is having variation among a theoretically infinite number of values. Some of the relevant examples are sine waves, their waveforms which represents human speech, and the conventional television camera signals. The ADC output in addition to this has levels or states defined. The digital signals simplest in nature have only two states which are defined as binary. The whole number representation can be in binary form as strings of ones and zeros. Propagation of digital signals are much more efficient than analog signals due to digital impulses advantages which are well-defined and properly ordered arrangement makes it lucid for electronic circuits to distinguish from chaotic noise. This is significant advantage of digital modes in the process of communications. Microprocessor operates by analyzing analog signal data and transforming into digital form. An ADC is used by a typical telephone modem for the conversion of the incoming audio from a twisted-pair line into signals recognized by the computer .If the signal input is analog an ADC is required in a digital signal processing system.

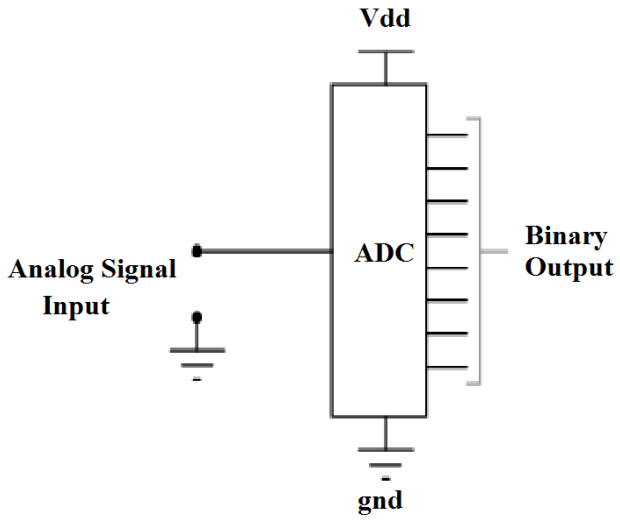

Fig. 3. Analog to Digital Converter

4.4 MICROCONTROLLER

P89V51RD2 is an 80C51 microcontroller with 64 KB flash having 1024 bytes of RAM data and X2 mode option is the key feature of this microcontroller. The design engineer can opt conventional 80C51 clock rate (12 clocks per machine cycle) to run the application or can choose the X2 mode (6 clocks per machine cycle) for achieving twice the throughput at the same clock frequency .Both parallel programming and in serial In-System Programming (ISP) are supported by the flash program memory [8].The high speed gang-programming are offered by the parallel programming mode which reduces the cost of programming and market time .The device is reprogrammed through ISP in the end product under software control. The field or update capability of the application firmware makes possibilities for wide range of applications[9].

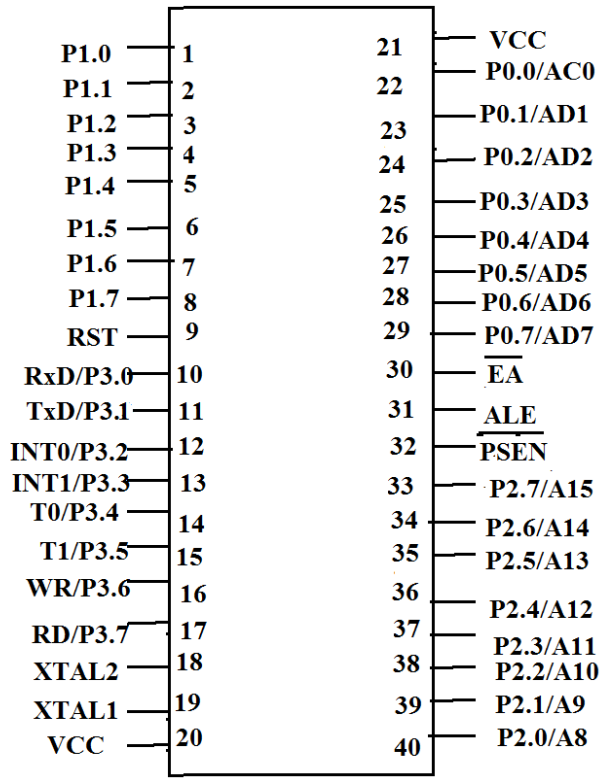

Fig. 4. Microcontroller chip

4.5 LIQUID CRYSTAL DISPLAY

The display of LCD utilizes two sheets of polarizing material along with a liquid crystal solution between the sheets. Electric current is passed through the liquid which causes the alienation of the crystals so that light cannot pass through them .Therefore, each crystal is just like a shutter, either it allows passing of the light through or blocks the light. LCD images which are monochrome appears as blue or dark gray images on top of a grayish-white background .There is two basic techniques for producing color through Color LCD displays in which Passive matrix is said to be less expensive among the two technologies. The technology used is called as thin film transistor (TFT) or even active-matrix . This technique produces color images that are as sharp as

traditional CRT displays, but this technology is expensive than Passive matrix .Passive-matrix displays of recent technology uses two new technologies CSTN and DSTN to produce sharp colors apart from active-matrix displays. A liquid crystal display have a special thin flat panel through which light can go through it, or blocks the light .As an LED, production of its own light is not there .Each block can be in any shape in the several blocks of the panel. Each block filled with liquid crystals can be made clear or in solid form, by just changing the electric current to that block .The LCDs are abbreviated as Liquid Crystal Display .The applications of Liquid crystal displays are it is used in battery-powered devices which includes digital watches, because of less consumption of electricity. They are again used for modern flat TV's screen . Some LCDs works well by themselves when there is other light around .Back-light is built in the product for smart phones, computer monitor, TV's and some other purposes.

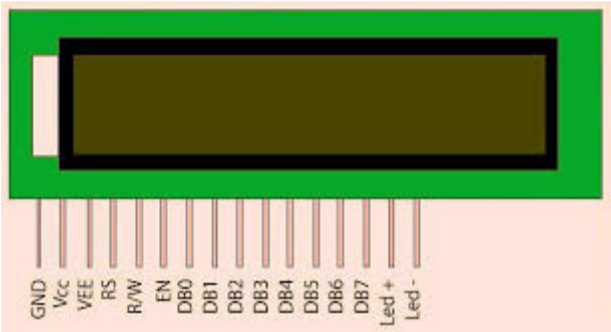

Fig. 5. Liquid Crystal Display

4.6 TRIAC

Triode for Alternating Current is known as TRIAC having a trade name as an electronic component which conducts current in both the direction after triggering or turning ON, formally it is also called a bidirectional triode thyristor or even bilateral triode thyristor. TRIAC belongs to the thyristor family and it is closely related to Silicon-controlled rectifiers (SCR). TRIACs can be triggered by either a positive or a negative current applied to its gate electrode, whereas triggering of SCR can only be enabled entering currents into the gate. In order to create a triggering current, application of a positive or negative voltage to the gate with respect to the A1 terminal (otherwise known as MT1).TRIACs of low power can be used in many applications such as light dimmers, speed controls for electric fans and other electric motors, and also in the modern control computerized circuits of many households either small or major appliances. TRIAC, DIACS are used for fitting. There is no gate electrode in DIACs, different from some other thyristors which are commonly used for triggering like TRIACs. Some of the TRIACs contain a built-in DIAC in series with the TRIAC's "gate" terminal for this purpose.

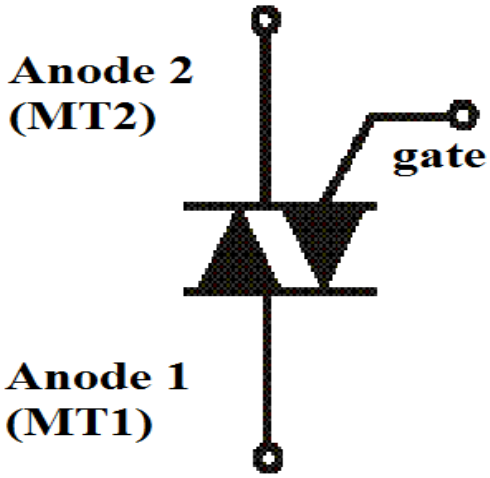

Fig. 6. Diagram of TRIAC

4.7 REED RELAYS

Relay that controls one or more reed switches using an electromagnet is called as Reed Relay. The contacts which are of magnetic material and the electromagnet acts directly without requiring an armature on them to move them

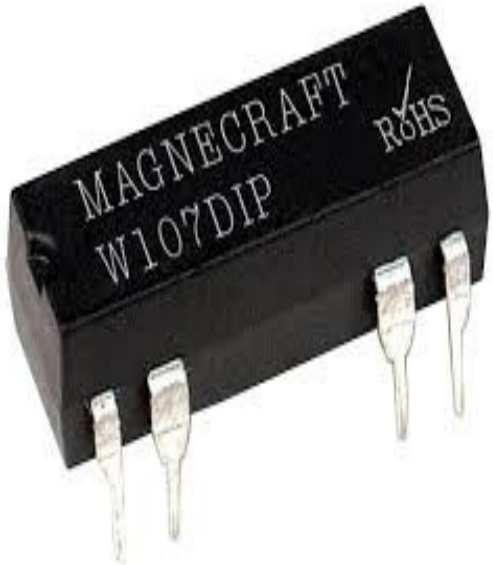

Fig. 7. Reed relay as a pressure switch

6. Circuit diagram for Operation

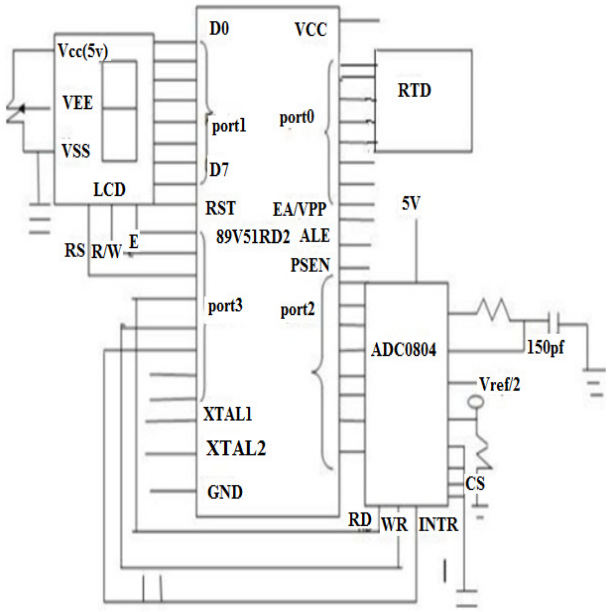

7. Block Diagram

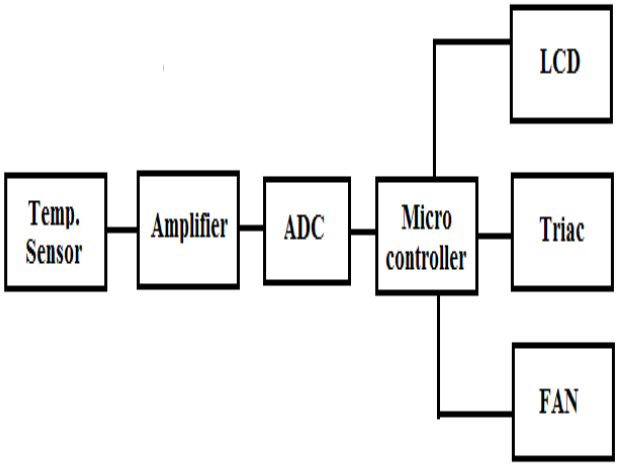

8. Operation Overview

Our operation procedure is annealing of iron rods and various metals by using controlled heating using RTD temperature sensors which controls the blower fan speed control for efficient annealing procedure for metals and alloys which will boost the lifecycle of the various metallic substances used in industrial applications. The temperature change of the metal is detected and corresponding signal is generated. The amplified analog signal is given as input to analog to digital converter which generates digital signal .The digital signal acting as control signal to microcontroller which acts as central driving unit of our circuit drives the fan regulating its speed. There is a interfacing of TRIAC and LCD with the microcontroller .Our focus is optimization of metal properties like surface hardness ,temperature resistance control, metallic strength in terms of malleability, flexibility and ductility by controlling speed of blower using quality heat treatment[10] .Random heating and cooling is carried in annealing operation to achieve the optimum results .The manual operation of Fan is completely eliminated due to microcontroller signal control using controlled heating and cooling procedure by the use of various electronic components by reducing the complexity of the operation. This experimentation research is carried out by using microcontroller providing low power consumption by using MOSFET Technologies and enabling high performance. The iron rod is annealed in a controlled fashion which decrements the stress of metallic bodies achieving quality heat treatment[11].

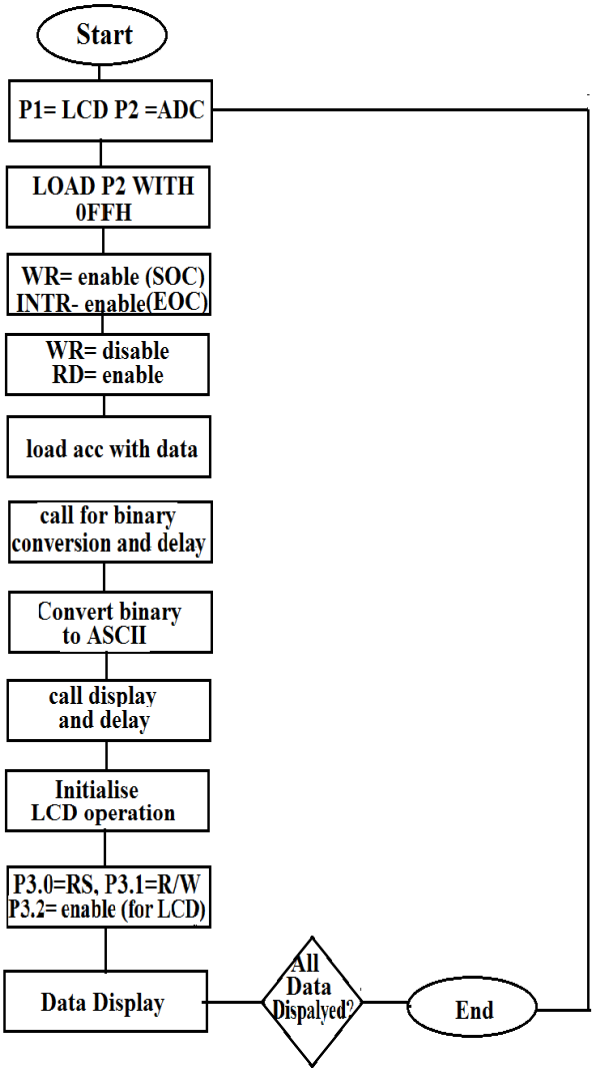

Fig. 8. Flow ch6art diagram of proposed model

9. Conclusion and Future Scope

The significance of this research work is the implementation of controlled annealing procedure of iron rods which enhances the chemical and structural properties by control mechanism of the speed of the air blower which contributes in rapid cooling and heating in the furnace via electronic circuit control feedback(RTD feedback) which leads to high quality yield material production of quality metallic substances which eliminates handling problems .The precise change in resistance in accordance with temperature change sensed by RTD sensors in the microcontroller circuit which has been programmed to generate control signals for precision control of speed leads to better quality of metallic products(iron rods) via effective annealing procedure. This experimental research has been implemented by using the control circuit responsible for generating control signals which optimizes the performance of operation achieving low power consumption using latest MOSFET Technologies and generating high performances. The annealing procedure of iron rods and other metals can be easily achieved by this unique approach in a controlled fashion reducing stress and other undesired attributes by quality heat treatment which was the key subject of investigation that has been presented in this research paper.

References

[1] Atul M. Gajare Nitin R. Bhasme "Control of air flow rate of single phase induction motor for blower application using V/F" International Journal of Engineering Sciences & Emerging Technologies, IJESET August 2013 pp 102-112.

[2] H. Wendes, Variable Air Volume Manual, 2nd ed. Liburn, GA: Fairmount, 1994.

[3] Gamazo-Real, J.C.; Vázquez-Sánchez, E.; Gómez-Gil, J. Position and Speed Control of Brushless DC Motors Using Sensorless Techniques and Application Trends. *Sensors* 2010, *10*, 6901-6947.

[4] Adjustable Frequency Control (Inverters) fundamentals application Consideration", Bulletin C870A, January, 1984, pp.1 - 14

[5] Principles of Steam Heating, Fuel oil & oil heat magazine, 389 Passaic Ave Fairfield, NJ, 07004.

[6] Wilson Boulevard, National Fuel Gas Code Handbook, Engineering Services Department. American Gas Association

[7] James E. Brumbaugh, Boilers, Boiler Conversions, Volume II, Macmillan Publishing Co., 866 Third Ave., New York

[8] Muhammad Ali Mazidi, 8051 microcontroller and Embedded Systems, Prentice Hall.

[9] Ajay Deshmukh, Microcontrollers: Theory and Applications, Tata Mc Graw Hill.

[10] K.Krishnaswamy, Process Control, New Age International Publishers.

[11] Annealing Temperature Optimization: Temperature Gradient, BIO-RAD.

Supantha Mandal is working as an Asst .Professor in St. Mary's Technical Campus, Kolkata in the department of Electronics and Communication Engineering. He has done a one year diploma in Computer Hardware & Networking and has Global CCNA certification in domain of networking. He did his BE (Electronics & Communication) engineering from University of Pune and did his Post Graduation (MS) from George Brown College (Ryerson University, Canada) in Computer Networking & PhD (Engg) in Jadavpur University in Robotics engineering. He has 3 years of industrial experience (Corporate Training, Networking, marketing, sales & service). His research area is based on autonomous robot simulation, bioinformatics, signal analysis and communication engineering. He has published more than 20 publications in international and national journals including international conference proceedings.

Arunava Kabiraj Thakur is working as an Asst. Professor in St. Mary's Technical Campus, Kolkata in the department of Electrical and Electronics Engineering and pursuing his Ph.D (Engg) in Jadavpur University in the department of Electrical Engineering. His research area is based on Condition Monitoring and fault analysis of electrical Machines. He published papers in international and national conferences and journals in the area of fault analysis of induction machines. He also worked in the domain of Data Envelopment Analysis (DEA) and Fuzzy Logic.

Suraj Kumar Saw did his B.Tech in Electronics & communication in the year 2013 and ME in wireless communication from BIT Mesra Ranchi Jharkhand India in 2015. His interests are on low power VLSI Design, clock and data recovery system, mixed signal design. He has published more than 25 publications in international and national journals & conferences repute. Currently he is perusing his PhD degree in Electronics & communication engineering from National institute of technology Arunachal Pradesh India.

Moumita Banerjee did her B.Tech in Electronics and communication in the Year 2015 from WBUT. Currently she is perusing her M. Tech in Electronics and communication specialization in VLSI from WBUT. Her interest is on coding, digital signal processing, antenna design and vlsi design. She did training from IBM in the year of 2014 in Embedded system. Also did training from eastern railway in 2014. She is presently pursuing training from WEBEL.

Srijita Das did her Diploma in Electronics and communication in the year 2016 from Techno India University. Currently she is perusing her B. Tech in Electronics and communication from Techno India University. Her interest is on digital design, analog electronics & microcontroller and microprocessor embedded system. She did project based training from ERTL in the year 2016 in PLC (Siemens PLC and SCADA) & Industrial Automation (Siemens and Rockwell System PLC and SCADA). She is presently perusing training from SIMOCO.