IJCSN - International Journal of Computer Science and Network, Volume 7, Issue 6, December 2018
ISSN (Online): 2277-5420
www.IJCSN.org
Impact Factor: 1.5

An Enhanced Distributed Algorithm For Agent-Based Microgrid Systems With High Penetration of DERs

[1]Moaad Aboumalik, [2]Mohamed EL Brak, [1,3]Mohamed Essaaidi

[1] LaSIT Lab., Electronics & Microwaves Group, Abdelmalek Essaadi University
Physics Dept., Faculty of Sciences, Tetuan, Morocco

[2] Dept. of Computer Science, Abdelmalek Essaadi University
Faculty of Sciences and Techniques, Tangier, Morocco

[3] ENSIAS College of Engineering, University of Mohamed 5th, Rabat, Morocco

Abstract –In this paper, a consensus-based network coordination problem for microgrids (MGs) and MG clusters is considered. The designed model focuses on optimizing the data sharing between the agents attached to each component of a MG system, in particular: distributed energy resource's agents and those of intelligent circuit breakers (i-CBs), in order to provide resilience to abrupt changes in microgrid topologies – since dispatch process and reconfiguration of data are not handled in a centralized manner. The long-term goal is to evaluate the impact of integrating high penetration of DERs on the through by using consensus distributed agent-based approach. On the other hand, the proposed method combines the performances integrated in the adaptive consensus algorithm (ACA) with that of the optimal power flow (OPF) to enhance the convergence towards the optimal cost. Due to communication network constraints, the agents are connected only to nearby neighbors. However, by using the enhanced distributed algorithm, DER agents may discover the required global information and hence compute new references for updating the optimal path. A MG test system is illustrated in order to validate the improvement of the presented method, and an under Matlab M-code based simulation results show the effectiveness of the enhanced algorithm.

Keywords – *Microgrid (MG), distributed energy resources (DERs), optimal power flow (OPF), adaptive consensus algorithm (ACA).*

1. Introduction

A Microgrid is a semi-standalone entity while connected to the electric power grid, when it can either buy electricity from, or sell excess generation to the other MGs that will forming the building blocks of the future electric supply chain: *Smart Grid (SG)* [1], [2]. When not connected to the electric grid, it operates in island mode where the load balancing and the frequency control are entirely established inside the MG [3]. Nowadays, the use of *autonomous MG systems* has played a major role in various aspects of today's power distribution grid, particularly in residential and remote areas. In fact, the advent of DERs with a large penetration and the extension of advanced SG technologies to the end-user may be strengthened by using multi-agent systems (MAS) [4] that are able to provide peer to peer communications, and lead to an improved control schemes and an interoperable systems. An agent is an entity (often a computer system) that is situated in some environment, and which is able to take autonomous actions in order to meet its design objectives [5]. As greater computational power becomes more available, researchers are able to model increasingly complex interconnected microgrids [6], [7].

In simulations, MAS were shown to scale to microgrids with hundreds of interconnected DERs, loads, buses, breakers, and other grid devices. Agent communications continue to evolve by adapting to changing grid communication protocols leading to improved agent consensus building, faster response time and adaptability [8], [9]. For this work, the purpose is to optimize power flows into a meshed MG system, by using consensus-based data sharing between the corresponding agents of each electric device in the MG system. Hence, a case study illustrating a simple electric design is proposed for allowing the duplication of the said model, in order to expand the procedure at a multi-microgrid clusters level. Figure 1 shows the concept of attaching MAS for all corresponding DERs within a backbone of microgrid system. For the rest of this paper, the proposed consensus based method is introduced including the OPF problem formulation. While the logic layer is a MAS system in which, each agent is in charge of a DER unit, the physic layer is composed of i-CBs and other devices for sensing and operating all microgrid action process. The penultimate section of this paper is devoted to simulation performances of a case study, and finally, a conclusion summarizes all the works done.

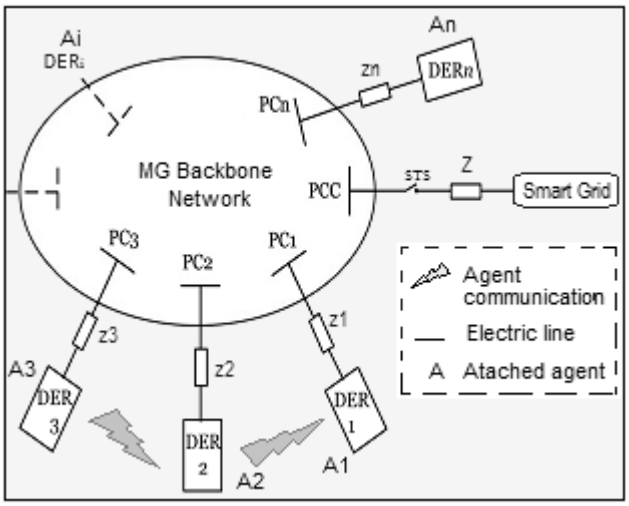

Figure 1. Model of the proposed consensus based structure attaching a computational agent to each DER unit.

2. Method

2.1. Problem statement and preliminaries

OPF and Consensus problems are prevalent problems in distributed cooperative agent systems, however, little research has been done for the optimal power management of MGs [10], [11]. For this study, a conventional OPF has been adapted for dispatch power in a MG with multiple DERs. Let consider a looped topology chain of the agent DERs as a direct graph: $G = (V, E, c)$ with edge costs which has vertex V set of nodes representing the system buses $(PC_1, PC_2 \ldots PC_n)$. $E \subseteq V \times V$ is a set of directed edges, representing the power distribution lines. Let S_{ij} denotes the apparent power from node i to node j and u_i denotes the complex voltage of DER at node i. S_{ij} *and* u_i are modeled in phasor form as the following:

$$S_{ij}=P_{ij}+jQ_{ij} \tag{1}$$

$$u_i=|u_i| \exp(j\theta_j) \tag{2}$$

The total flow's active power between the nodes: i and j is given by the equation (3) according to conditions depicted in Table 1:

$$P_i = \sum_{j \in N(i)} P_{ij} = \sum_{j \in N(i)} \frac{1}{x_{ij}} \left(\theta_i - \theta_j\right) \tag{3}$$

Table 1 : Preliminaries & nomenclature

$e_{ij}=(v_e,v_j)$	The edge from node i to node j
$N(i)$	The set of neighbors of node i
I	The incidence matrix of the digraph G
$L(i)$.	The set of lines leaving node i
D	The diagonal matrix whose entries are jx_{jj}
$A=DI$	The weighted incidence matrix
r_{ij}	The line Resistance
x_{ij}	The line Reactances
$z_{ij}=r_{ij}+jx_{jj}$	The Impedance of line
μ_n	The nth bus of the link control P_n^{ij}

The preliminary goal is to control the flow of the active power, P_{ij}
Assuming that: $r_{ij} << x_{ij}$. in this case :
The voltage magnitudes = Constant across the power network
Under this scenario, we assume that the bus phases are about equal, hence we have:

- Active and Reactive powers are decoupled because θ_i-θ_j → 0
- Active power's flow depend to θ_i-θ_j
- Reactive power is depend to $|u_i|$-$|u_i|$.

On the other hand, we consider the said scenario (see Table 1) and the constraints on the maximum flow in each edge. Therefore, we need to write the equation above in a matrix form, obtaining the power flows in each transmission lines (edge e_{ij}):

$$P = B\theta \tag{4}$$

where $P=[P_1, \ldots, P_N]$, $\theta=[\theta_1, \ldots, \theta_N]$, and B is defined as:

$$B_{ij} = \begin{cases} \sum_{j \in N(i)} \frac{1}{x_{ij}} & \text{if } i = j \\ -\frac{1}{x_{ij}} & \text{if } e_{ij} \in E \\ 0 & \text{if } e_{ij} \notin E \end{cases} \tag{5}$$

The equation (5) illustrates the total cost of active power generated by all DERs, and which must to be optimized within the constraints mentioned in Table 1. Indeed, the optimal OPF problem could be formulated as presented by the equation (6) taking into account: $C_i(P) \in$ IR that will quantify the function of the cost plighted by the ith cost at the power level P_i:

$$\begin{aligned} &\text{minimize} && \sum_{i=1}^{N} C_i(P_{Gi}) \\ &\text{with respect to} && P_{G1},\ldots,P_{GN} \\ &\text{subject to:} && B\theta = P_G - P_L \\ & && \underline{P}_G \le P_G \le \overline{P}_G \\ & && P \le A\theta \le \overline{P} \end{aligned} \tag{6}$$

With:
P_G: Active power for all DERs;
P_L: Total loads in the MG;
$\underline{P}_G$: The lower limits on DER i;
$\overline{P}_G$: The upper limits on DER i;
$\underline{P}$ and $\overline{P}$: The limits on the active power flowing in the L (i) lines.

2.2. Equivalent distributed OPF

For a fully distributed topology, the same problem may be overhauled by recasting the original optimal power flow as a modified problem in which the decision variables are the phase angles [12], as described by equation (7):

$$\text{minimize} \quad \sum_{i=1}^{N} C_i((B\theta)_i + P_{Li}) \qquad (7)$$

$$\text{with respect to} \quad \theta_1,\ldots,\theta_N$$

$$\text{subject to:} \quad \underline{P}_G - P_L \le B\theta \le \overline{P}_G - P_L$$

$$\underline{P} \le A\theta \le \overline{P}$$

Where $(B\theta)_i$ is the ith element of $B\theta$. To be more precise, suppose that a link control P_n^{ij} from Bus i to Bus j at the nth iteration step is the decision variable. Then the bus power control μ is determined by the link control P_n^{ij} as assuming by some research papers [13], [14], we have :

$$\mu_n^i = -\sum_{(i,j)\in G} P_n^{ij} + \sum_{(i,j)\in G} P_n^{ji} \qquad (8)$$

If a novel bus is linked to bus r only, then, (9) will modify the control of the bus r given by the equation (8) as following:

$$x_{n+1}^r = x_n^r - \sum_{(r,j)\in G} P_n^{rj} + \sum_{(j,r)\in G} P_n^{jr} \qquad (9)$$

This formulation is similar to the partially distributed formulation [12], but it is modified by the unique feature which is the transition toward a fully distributed topology. Hence, each node has a unique identity and neighboring information thanks to the addition of the ACA enhancement, which requires a *dynamic root node* elected after each fault clearance process. As seen from Figure 2, the decision-making procedure is established locally by each DER unit since it can decide its own generation set point through its attached agent. This agent send information to the controller agent by using only the information on neighboring buses, which are directly connected to it.

2.3. OPF-ACA enhancement

The presented distributed approach for power dispatch and data-sharing system may be referred to as a consensus dispatch process, which guarantees the convergence to a collective decision on each activated adjacent matrix of the DER/ i-CB agent systems. It yields the sum of the state of all nodes in an invariant quantity using the ACA based communication law as depicted by [15].

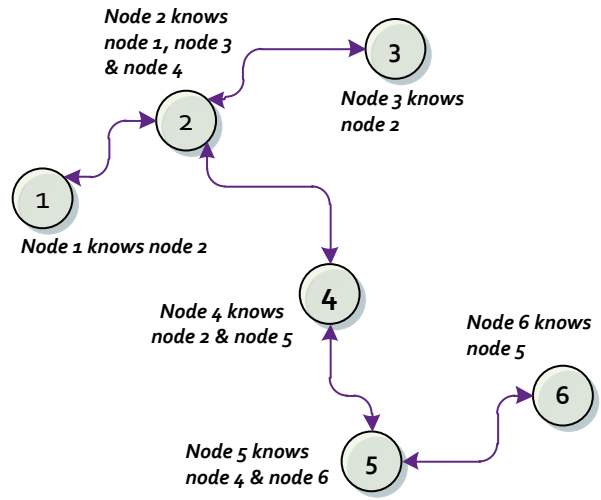

Figure 2. Each agent is able to share its own status and sends the data collected from its neighbor node as implemented in a clasic ACA.

The discovery ACA-OPF requires the existence of a unique node, called: *root*, to initialize the embedded code. Indeed, the dynamic root node, which is the leader agent elected after each fault clearance process is implemented in the proposed hybrid algorithm. Shown in Figure 3 and Figure 4 are respectively the diagrams of the procedure representing the embedded program and the information flows collected from neighboring network to access the global information.

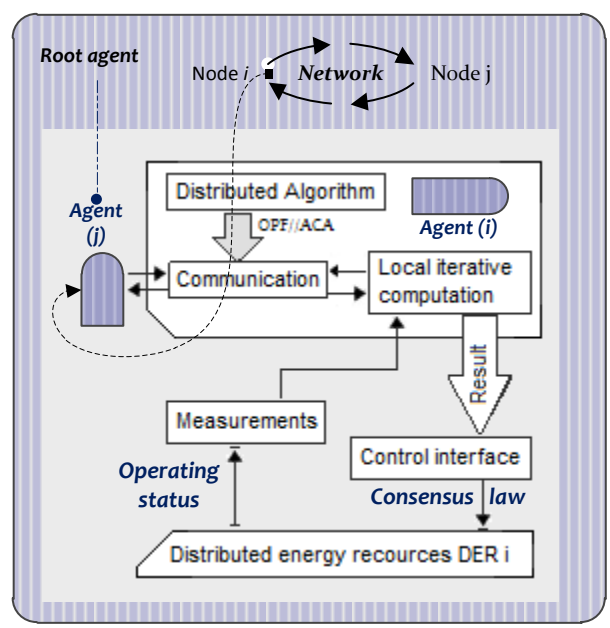

Figure 3. Diagram of the embedded OPF-ACA program, between the ith DER agent, the node i and the node j.

To enhance the depth first search node discovery of ACA, it is useful to find a minimum spanning tree starting from a root node, and exploring all the MG network [9], [16]. An agent turns into a discovered state following an acknowledgement message in response to receiving a propagate message from the token holder agent [17]. All agents hold the state values for itself and neighbor agents as depicted in the first and second parts of the enhanced algorithm in Figure 5, while Figure 4 presents the state diagram of each agent in the isolated part.

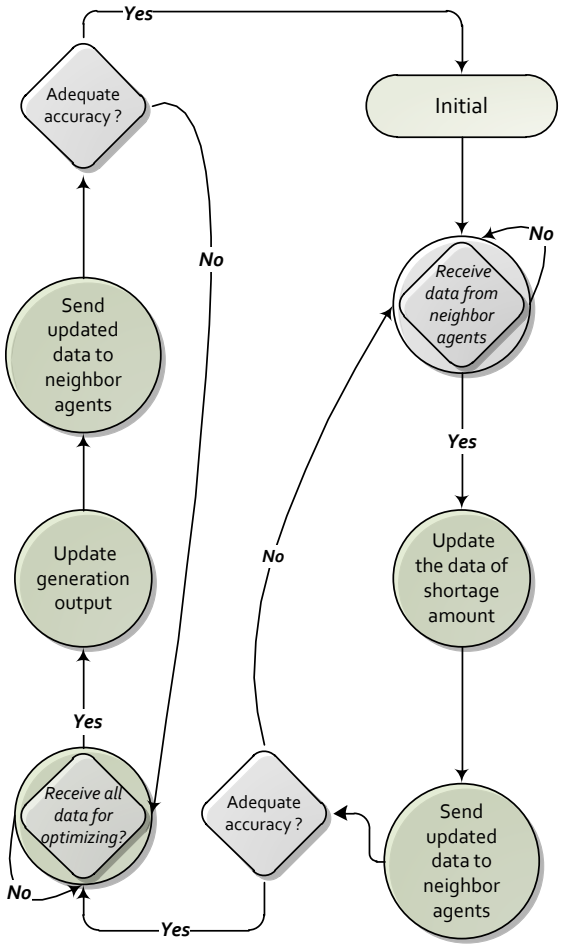

Figure 4. The state diagram representing the ACA-OPF algorithm: each agent in its isolated part travels 7 steps taking into consideration the OPF constreints formulated in the paragraph 2.2 and the Table 1.

The 1st part of the distributed algorithm focuses on the basic flow of the distributed depth first search node discovery-ACA. Furthermore, the optimal dispatch is established by using the classic ACA based communication law [15], [16] :

```
BEGIN
Leader agent initiates node
discovery ;
Holds token ;
Leader agent marks its self as
visited and discovered.
LOOP
Token holder agent:
-> Propagate Neighbors ;
-> Token Pass to a random but not
visited neighbor ;
On receiving Propagate from
i : = neighbor:
If (Propagate) Then -> return
State
On receiving Token Pass from
i : = neighbor:
If (Token Pass) Then -> mark
Agent (i) as parent node
```

Figure 5. 1st Part of the modified distributed ACA

A sequentially token-passing method from node to node is implemented to explore the network. Hence, an agent can be in discovered, visited or propagating states. The process is repeated until the leader agent is found. When the information sharing converge once again, the generation among of each DER unit is determined for isolated part:

```
…
Holds token;
Leader agent marks its self as
visited and discovered;
INITIALIZE
Propagate to neighbors;
On receiving Propagate Reply
From i : = neighbor:
SWITCH
Token holder agent do Agent's
state
Case 1: Not visited nor discovered
Update: agent pair list & agent
list;
Case 2: visited
Skip;
Case 3: all neighbors are visited
End discovery;
If (End discovery) Then
Until (Leader agent receives final
lists) do
Agents: pass to parent nodes agent
pair list & agent list;
End Until
End
```

Figure 5. 2nd Part of the modified distributed ACA

3. Results and Discussion

3.1. Use Case

In the MG- test system shown in Figure 6, it is supposed that each peer of the DER agents has a local table that is used as a lookup table, which routes the request information according to the enhanced ACA (communication flow is represented by interrupted lines). This solution applies the distributed overlay principle to dispatch the power μ (the link control) [16], [18].

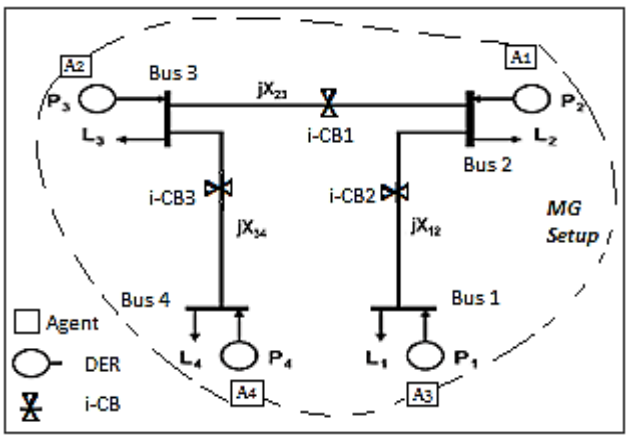

Figure 6. Four-Bus Test system

The Power lines P_1, P_2, P_3, and P_4 flow between Buses {1-2}, {2-3}, and {3-4}, and they have pure imaginary impedance, hence they are lossless. Simulation results are provided as a proof of the enhanced ACA.

3.2. Inputs:

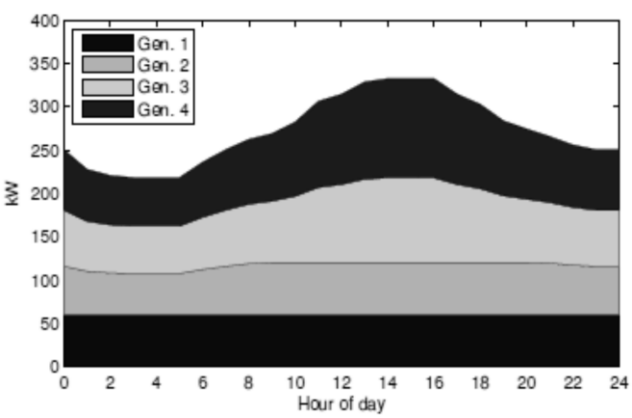

Figure 7. DER's Power profiles collected as example from [19].

Shown in Figure 7, is the fourth generated power profiles during 24 hour of a day, while Table 2 summarizes the main characteristics and specifications related to the MG buses.

Table 2: Powers and loads on the test system in a given situation

The loads on the buses :	Capacity factors :	
L1: 110 kW	$\gamma 1$	P1=120 kW
L2 : 119 kW	$\gamma 2$	P2=150 kW
L3 : 90 kW	$\gamma 3$	P3=200 kW
L4 : 220 kW	$\gamma 4$	P4=280 kW

3.3. Simulation results:

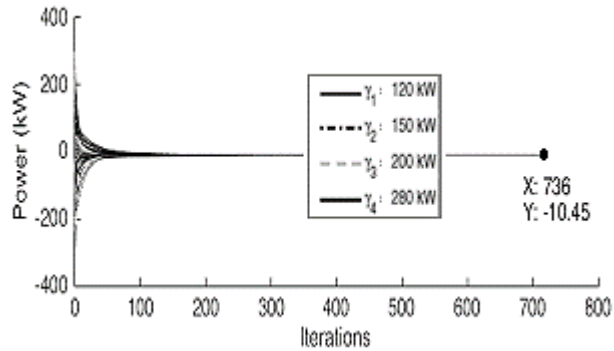

Figure 8. Data sharing of power flow cost without enhancement

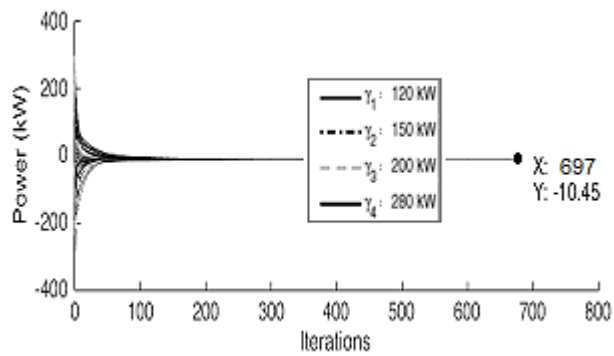

Figure 9. Data sharing with Enhanced distributed Algorithm

3.4. Analysis and Discussion:

As entered in the table 2, we have:

L = 110 + 119 + 90 + 220 = 539 kW, and the total of capacity factors are : $\gamma 1+\gamma 2+\gamma 3+\gamma 4 = 0.7187$
The modified consensus is:
x = 0.7187 ž−111= [86.24, 107.81,143.74, 201.24]
žx = 0.718711
By choosing the order for the links as:
{1, 2}, {2, 1}, {2, 3}, {3, 2}, {3, 4}, {4, 3}:
$x = [x_{12}, x_{21}, x_{23}, x_{32}, x_{34}, x_{43}]$

The simulation during 800 iterations provided successful results. It could be observed that the improvement of the modified consensus with distributed algorithm is at the 697th iteration.

Hence, there is an enhancement in the order of 39 iteration compared to the conventional ACA (see Figures 8 and 9).

$\gamma = \{(1, 2), (2, 1), (2, 3), (3, 2), (3, 4), (4, 3)\}$;

$x = [x1, x2, x3, x4]$;

$\gamma = [120,150, 200, 280]$;

$\check{z} = diag\ [1/120, 1/150, 1/200, 1/280]$.

Furthermore, if suddenly at an iteration step, (for instance at X: 300), an active power becomes available from another DER or from a storage system that has finished its charging; the MG will be able to elect the leader node by using the enhanced ACA which up-dates its consensus table according to the decision making process established by the MAS system, and the added generation power will only affect its neighboring buses. Equation (10) describes this situation as following:

If a new bus, labeled r + 1, is added to the test system with its own load Lr+1 and capacity factor γr+1, we have (10) with all other bus's control link unchanged :

$$x_{n+1}^{r} = x_{n}^{r} - \sum_{(r,j)\in G} P_{n}^{rj} + \sum_{(j,r)\in G} P_{n}^{jr} - P_{n}^{r,r+1} + P_{n}^{r+1,r} \qquad (10)$$

However, some limitations and mathematical considerations could not be covered in detail in this study. Here was done a basic formulation of the said method, and future works will take into account, a real microgrid benchmark, in order to execute the enhanced algorithm into a real environment. The distinct feature of this model is that it takes into account the communication network, which is vital in the modern MGs.

4. Conclusion

As an overview of a modified method for optimal power control in mesh MGs, this paper involved fundamental concepts of the main methodologies. An OPF theory based agent consensus performances was modeled, and for information discovery, ACA was enabled. Regrouping these specifications has led to a fully information discovery process which was distributed such that each node only needs to communicate with its direct neighbors. Simulation results provides optimal solution in terms of rapid iteration convergence and gives an alternative to the previously ACA algorithms in the case of small meshed MG systems. In contrast, it should be necessary to overhaul the test model with a high number of DERs and for a more realistic setup, more effort should be put on a description of flexible DERs and its costs settings.

Acknowledgement

The authors acknowledge the anonymous reviewers for their comments that improve the quality of this paper.

References

[1] "(PDF) Peer to Peer Distributed Energy Trading in Smart Grids: A Survey," *ResearchGate*. [Online]. Available: https://www.researchgate.net/publication/325775269_Peer_to_Peer_Distributed_Energy_Trading_in_Smart_Grids_A_Survey. [Accessed: 01-Nov-2018].

[2] Moaad Aboumalik, Mohamed EL Brak, and Mohamed Essaaidi, "Moving Towards a Smarter Power Grid," *[In Progress].IJSGCE*, vol. 8, no. 1, Jan. 2019.

[3] M. Kezunovic, "Teaching the smart grid fundamentals using modeling, simulation, and hands-on laboratory experiments," in *IEEE PES General Meeting*, Minneapolis, MN, 2010, pp. 1–6.

[4] E. H. Et-Tolba, M. Maaroufi, and M. Ouassaid, "A multi-agent system architecture modeling for smart grid context," in *2014 International Conference on Next Generation Networks and Services (NGNS)*, Casablanca, Morocco, 2014, pp. 178–181.

[5] S. Franklin and A. Graesser, "Is It an agent, or just a program?: A taxonomy for autonomous agents," in *Intelligent Agents III Agent Theories, Architectures, and Languages*, vol. 1193, J. P. Müller, M. J. Wooldridge, and N. R. Jennings, Eds. Berlin, Heidelberg: Springer Berlin Heidelberg, 1997, pp. 21–35.

[6] M. Merdan, A. Prostejovsky, I. Hegny, W. Lepuschitz, F. Andrén, and T. Strasser, "Power Distribution Control Using Multi-Agent Systems," in *Recent Advances in Robotics and Automation*, G. Sen Gupta, D. Bailey, S. Demidenko, and D. Carnegie, Eds. Berlin, Heidelberg: Springer Berlin Heidelberg, 2013, pp. 323–333.

[7] A. Chandrayan and D. P. Idowu, "Laboratory-Scale Microgrid Test-Bed – Intelligent Multi-Agent Based Distributed Control," p. 2.

[8] R. Bajcsy, Y. Aloimonos, and J. K. Tsotsos, "Revisiting active perception," *Auton Robot*, vol. 42, no. 2, pp. 177–196, Feb. 2018.

[9] R. Olfati-Saber, J. A. Fax, and R. M. Murray, "Consensus and Cooperation in Networked Multi-Agent Systems," *Proceedings of the IEEE*, vol. 95, no. 1, pp. 215–233, Jan. 2007.

[10] E. Dall'Anese, Hao Zhu, and G. B. Giannakis, "Distributed Optimal Power Flow for Smart Microgrids," *IEEE Transactions on Smart Grid*, vol. 4, no. 3, pp. 1464–1475, Sep. 2013.

[11] S. Magnússon, P. C. Weeraddana, and C. Fischione, "A Distributed Approach for the Optimal Power Flow Problem Based on ADMM and Sequential Convex Approximations," *arXiv:1401.4621 [math]*, Jan. 2014.

[12] N. Nikmehr and S. Najafi Ravadanegh, "Optimal Power Dispatch of Multi-Microgrids at Future Smart Distribution Grids," *IEEE Transactions on Smart Grid*, vol. 6, no. 4, pp. 1648–1657, Jul. 2015.

[13] E. Mojica-Nava, C. A. Macana, and N. Quijano, "Dynamic Population Games for Optimal Dispatch on Hierarchical Microgrid Control," *IEEE Transactions on Systems, Man, and Cybernetics: Systems*, vol. 44, no. 3, pp. 306–317, Mar. 2014.

[14] T. Hong and F. de Leon, "Centralized Unbalanced Dispatch of Smart Distribution DC Microgrid Systems," *IEEE Transactions on Smart Grid*, vol. 9, no. 4, pp. 2852–2861, Jul. 2018.

[15] E. Rokrok *et al.*, "A Decentralized Multi-Agent-Based Approach for Low Voltage Microgrid Restoration," *Energies*, vol. 10, no. 10, p. 1491, Sep. 2017.

[16] L. Meng, T. Dragicevic, J. Roldan-Perez, J. C. Vasquez, and J. M. Guerrero, "Modeling and Sensitivity Study of Consensus Algorithm-Based Distributed Hierarchical Control for DC Microgrids," *IEEE Transactions on Smart Grid*, vol. 7, no. 3, pp. 1504–1515, May 2016.

[17] M. Farivar, "Optimization and Control of Power Flow in Distribution Networks," p. 150.

[18] D. Zhang, J. Jiang, L. Y. Wang, and W. Zhang, "Robust and Scalable Management of Power Networks in Dual-Source Trolleybus Systems: A Consensus Control Framework," *IEEE Transactions on Intelligent Transportation Systems*, vol. 17, no. 4, pp. 1029–1038, Apr. 2016.

[19] D. Wu, T. Yang, A. A. Stoorvogel, and J. Stoustrup, "Distributed Optimal Coordination for Distributed Energy Resources in Power Systems," *IEEE Transactions on Automation Science and Engineering*, vol. 14, no. 2, pp. 414–424, Apr. 2017.

Biographies

Moaad Aboumalik was born in Marrakech, Morocco, in 1986. He received the *"Ingénieur d'Etat – mention Bien"* degree in: Telecom Systems & Computer Networks from the *"ENSA"* College of Applied Sciences of Abdelmalek Essaadi University in Morocco (Tetuan in 2011), and the B.S degree in: Electro-technical Engineering from the *"EST"* College of Technology at the University of Moulay Ismail in Morocco (Meknes in 2008). Since 2013, he was with the Electronics & Microwaves Research Group, in the Faculty of Sciences of Tetuan where he is currently studying toward a PhD degree in: Electrical Engineering & Renewable Energy. He is involved in the field of Smart Systems and Green ICT where he holds a patent (OMPIC MA 39671 A1) and his current research is concerning about designing new ICT architectures for Microgrid systems with particular emphasis on Consensus-based data sharing; Power Sharing and Hierarchical Control in Islanded mode. Eng. Moaad Aboumalik is also a member in the International Neural Networks Society (INNS) since 2017.

Mohamed EL Brak Dr. Professor of Computer Science in the Faculty of Sciences and techniques of Tangier, at Abdelmalek Essaadi University in Morocco. He was born in Ksar EL Kebir, Morocco, in 1969. He received the "Physic BS" degree in electronics from the Faculty of Sciences in Tetuan, at Abdelmalek Essaadi University, Morocco (in 1993), and the "DEA" degree in data processing from Hassan II University of Casablanca (in 1995), and a PhD in Telecommunications from Abdelmalek Essaadi University in 2003. He is Member of: Computer Science, Systems & Telecoms Laboratory (LISIT Lab.) at the FST Faculty of Tangier, He was a member of the Organizing and Scientific Committees of several symposia and conferences dealing with topics related to Computer Sciences and Engineering. His research interests include patsh antenna design, Ad-hoc networks and Wireless Sensor Networks for Smart Grid Applications.

Mohamed Essaaidi, Prof. Dr., IEEE Senior Member has been the Dean of "ENSIAS" College of Engineering of Mohammed V University, Rabat, Morocco since December 2011 and he was a Professor of Electrical & Computer Engineering at Abdelmalek Essaadi University, Morocco from 1993 till 2011. He is the founder and past Chairman of the IEEE Morocco Section (2005-2015), co-founder of "IEEE Antennas and Propagation Society" and "Microwave Theory and Techniques Society Morocco Joint Chapter". He has been a member of "IEEE Global Committee on Accreditation activities" since 2016. He has authored and co-authored 5 books and more than 200 papers in international refereed journals and conferences in the field of Electrical and Information and Communication Technologies. He has been the Editor-in-Chief of International Journal on Information and Communication Technologies, Serial Publications, India (2007-2011). He is also an active member of the editorial boards of several IEEE and other indexed international journals in the field of information and communication technologies. Furthermore, he holds 10 patents in the field of Information and Communication Technologies. He was also a member of the "IEEE 802.16 Sponsor Ballot Pool" of IEEE Standard Association that defined the technical specifications for WiMAX. Prof. Essaaidi supervised several PhD and Masters Theses and has been the principal investigator and the project manager for several international research projects.