IJCSN International Journal of Computer Science and Network, May 2014
ISSN (Online) : 2277-5420
www.IJCSN.org

Conference Proceeding – RDFCORDGE - 2014

Wireless Electricity Transmission Based On Electromagnetic and Resonance Magnetic Coupling

[1] Ramesh Kumar Banjare, [2]Manoj Kumar

[1]MMCT,Raipur, Department-Electrical & Electronics Engineering,
City-Raipur, State-Chhattisgarh

[2]MMCT,Raipur, Department-Mechanical Engineering,
City-Raipur, State-Chhattisgarh

Abstract - Wireless Electricity transmission is based on strong coupling between electromagnetic resonant objects to transfer energy wirelessly between them. This differs from other methods like simple induction, microwaves, or air ionization. The system consists of transmitters and receivers that contain magnetic loop antennas critically tuned to the same frequency. Due to operating in the electromagnetic near field, the receiving devices must be no more than about a quarter wavelengths from the transmitter. Unlike the far field wireless power transmission systems based on traveling electro-magnetic waves, Wireless Electricity employs near field inductive coupling through magnetic fields similar to those found in transformers except that the primary coil and secondary winding are physically separated, and tuned to resonate to increase their magnetic coupling. These tuned magnetic fields generated by the primary coil can be arranged to interact vigorously with matched secondary windings in distant equipment but far more weakly with any surrounding objects or materials such as radio signals or biological tissue he.

Keywords- *Wireless Electricity Device, Oscilating magnetic Field, Resonant Magnetic Coupling, Magnetic Resonance Imaging.*

1. Introduction

Electricity is today a necessity of modern life. It is difficult to imagine passing a day without electricity. The conventional use of electricity is made possible through the use of wires. However researchers in MIT have devised a means of providing electricity without any wires. Wireless Electricity, a portmanteau for wireless electricity, is a term coined initially and used. This principle of wireless electricity works on the principle of using coupled resonant objects for the transference of electricity. The system consists of Wireless Electricity transmitters and receivers that contain magnetic loop antennas critically Tuned to the same frequency. Wireless power transmission is not a new idea; Nikola Tesla demonstrated a "transmission of electrical energy without wires" that depends upon electrical conductivity as early as 1891.The receiver works on the same principle as radio receivers where the device has to be in the range of the transmitter. It is with the help of resonant magnetic fields that Wireless Electricity produces electricity, while reducing the wastage of power. This is unlike the principle adopted by Nikola Tesla in the later part of the 19th century; where conduction based systems were used. The present project on Wireless Electricity aims at power transmissions in the range of 100 watts. May be the products using WiTricity in future might be called Wireless Electricity So we have been able to power a 60 watt light bulb from a power source that is located about seven feet away, while providing forty percent efficiency. This was made possible using two copper coils.

2. Block Diagram

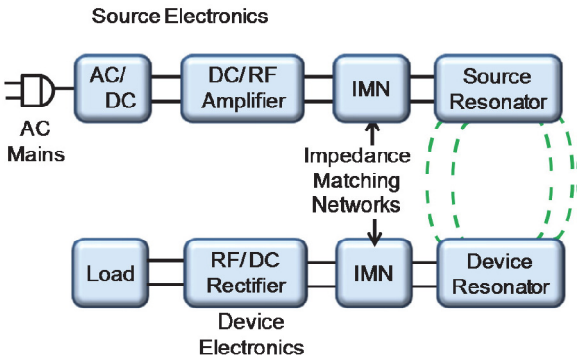

Figure 1: System Block Diagram

3. Oscillator

There are two general classes of oscillators: sinusoidal and relaxation. Op-Amp sinusoidal oscillators operate with some combination of positive and negative feedback to drive the op-amp into an unstable state, causing the output to transition back and forth at a continuous rate. Relaxation Op-Amp oscillators operate with a capacitor, a resistor or a current source to charge/discharge the capacitor, and a threshold device to induce oscillation. The

oscillator design that we utilized was a relaxation oscillator using a single Operational amplifier. This oscillator was a Square Wave Generator and could be classified in the category as an satiable multivibrator.

4. Design

In the design of a Relaxation oscillator, as shown in the figure below, we used a high speed Operational amplifier, AD829, which had a very high frequency response of 120 MHz The operational amplifier was connected in a Schmitt-trigger2 configuration with positive feedback through a resistor of 500 Ohms and a variable resistor of 1K. The inverting input for the Op-Amp was biased with a capacitor of 20pF and a resistor of 200 Ohms.

5. Working Principle

Electromagnetic induction is the most widespread method of the wireless power transmission and is based on the principle of transmitting and converting the magnetic flux. Here the magnetic energy is transmitted from a primary coil to a secondary coil by the electromagnetic induction between them.

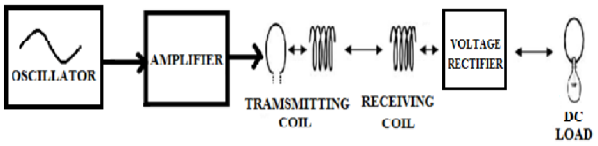

Figure 2: Block Diagram

6. Application

6.1. Low Power Product Category.

Example - Remote controls, game controllers, computer headsets, gaming headsets, sensors, wireless thermostats, smoke detectors.

6.2. Full Power Product Category

Example -I Phone/smart phones, smart phone accessories, net books, net book accessories, wireless speakers.

6.3. High Power Category

Example - Digital photo frames, laptops, laptop accessories, flat panel TV's.

6.4. Industrial Application

Example - Robots, packaging machinery, assembly machinery, machine tools, drilling, mining, underwater, etc

7. Conclusion

This concept offers greater possibilities for transmitting power (by increasing frequency) with negligible losses and ease of transmission than any invention or discovery here before made. The transmission of power without wires is not a theory or a mere possibility, it is now a reality .Many researchers have established in numerous observations, experiments and measurements, qualitative and quantitative. Dr. Neville of NASA states "*You don't need cables, pipes or copper wires to receive power. We can send it to you like a cell phone call – where you want it, when you want it, in real time"*. We can expect with certitude that in next few years' wonders will be brought by its applications if all the conditions are favorable. It is Presumed that wireless energy would be really accomplished with advantage of easy implementation and cost effective i.e., cost of transmission and distribution overhead would become less and moreover it is important that the cost of electrical energy to the consumer would also be reduced compared to existing systems.

References

[1] Nikola Tesla, My Inventions, Ben Johnston, Ed., Austin, Hart Brothers, p. 91,1982.
[2] http://en.wikipedia.org/wiki/Microwave_transmission.
[3] http://electronics.howstuffworks.com/everyday-tech/wireless-power.htm
[4] http://www.slideshare.net/varnithavarni71/wireless-power-transmission-for-solar-power-satellites-31346068
[5] http://www.teslasociety.com/tesla_tower.htm
[6] http://www.instructables.com/id/Wireless-Power-Transfer-Simple-and-Fast-Way
[7] http://www.slideshare.net/soumyaprateekmuni/wireless-power-transmissionfuture
[8] http://www.engineersgarage.com/contribution/wireless-power-transmission
[9] http://www.murata.com/products/wireless_power/tech_intro
[10]http://peswiki.com/index.php/Directory:Wireless_Transmission_of_Electricity