IJCSN International Journal of Computer Science and Network, May 2014
ISSN (Online) : 2277-5420
www.IJCSN.org

Conference Proceeding – RDFCORDGE - 2014

Performance Analysis of Patch Array as a Smart Antenna

[1]Rajiv Pathak, [2] Manas Ranjan Jena, [3]B.B.Mangaraj

[1]Research Scholar, CSVTU, Bhilai, India
[2]Veer Surendra Sai University of Technology, Burla, Odisha
[3]Veer Surendra Sai University of Technology, Burla, Odisha

Abstract- Smart antenna is one way to solve the major problems of wireless and cellular communication, like multipath propagation and co-channel interference. The basic requirement of cellular communication is transmit signal only in desired direction rather than in Omni direction to minimize the interference and fading effect. Optimization of patch array antenna for cellular communication will be considered on the basis of range of its beam-forming and adaptability. This paper deals with collective ability of a patch array antenna, which makes it suitable for cellular communication. Result is based on the survey of different research work and field work carried out previously by several researchers.

Keywords- *Smart Antenna, Beam-forming, Optimization, Microstrip patch antenna.*

1. Introduction

Antenna is one of the most important initiator of wireless communication. Smart antenna is a smart technique to generate an optimized radiation pattern of so many elements of antenna, towards the desired user while rejecting unwanted interferences [1]. Beam-forming and adaptation is the concept which can enhance the directivity and adaptability of any antenna and force them to be a smart antenna [2]. This paper elaborates the key characteristics of the patch array antenna which make it suitable for being a smart antenna. Microstrip patch antennas are inexpensive, light weight, conformal, easy to manufacture and so why they are most suitable type of element for portable devices [3].

Pattern generation is dependent upon the design specifications of antenna i.e. is known to be highly multimodal functions of the physical dimensions of the antenna elements, their spacing, their phase, and their input current, etc [1]. A rectangular patch is widely used configuration because it's very attractive radiation characteristics and low cross polarization radiation [3]. In cellular communication radiation pattern should have very narrow beam-width to minimize the interference [1]. The aim behind such type of research survey is to find out the appropriate antenna to generate narrow beam-width so that it can fit with the requirement of cellular system. Now adoptability of user is another basic requirement of cellular system. That can be achieved by throwing the main lobe of radiation pattern in user direction while null elsewhere to avoid interference and multipath propagation of signal. The beam formation and adoptability of user to avoid the above said problem of cellular system is the theme of smart antenna. There is a possibility to become a patch array antenna as a smart antenna [3]. The possibility can be converted into reality just by analyzing the performance of patch array antenna [8].

The performance analysis of patch array can be performed by numerical techniques. The structure code for patch array antenna can be written in MATLAB by considering the several input and output parameters [1]. For the performance analysis the possible values of these parameters will be varied either manually or by means of programming techniques. Structure code for planner array antenna can be written using different optimization techniques. The optimization technique will have so many search spaces as its input parameters and for different search spaces it will have different output parameters [9].

By comparing all the output parameters the optimum result can be concluded. For that particular optimum result, it is possible to find out the corresponding input parameters. Using corresponding input parameters one can go for the physical design and result verification of antenna with help of CST Microsoft studio. In this paper area of discussion is restricted to the suitability of patch array antenna for cellular system.

2. Major Problems of Cellular Systems

Cell splitting and frequency reuse is the basic concept of cellular systems. The use of Omni directional antenna in cellular system is at most. Due to the Omni directional and frequency reuse co-channel interference is the common challenge in the cellular system [5].

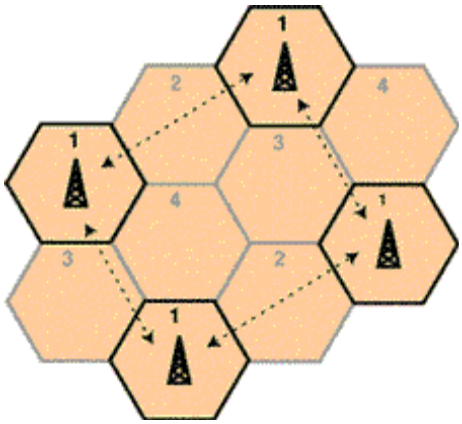

Fig1:Co-channel Interference

Another major problem of cellular system is multipath propagation where transmitted signal is reflected with several obstacle and travels from base station to mobile users. There are several effects of this multipath propagation [5]. They are i) Fading ii) Phase cancellation iii) Delay spreading.

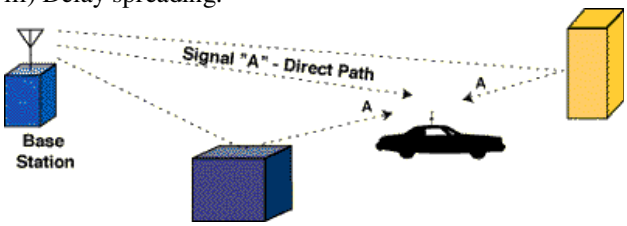

Fig2: Multipath Propagation

Previously lots of techniques has been derived to short out the above problems like cell splitting and cell sectoring. In cell sectoring a big cell is further divided into small cells and for smaller coverage area lesser signal strength for transmission is required which minimizes the above problems in some extent. Hence smart antenna is one of solution of these two major problems.

3. Theory of Smart Antenna

Smart antenna is a system combines radiation pattern of multiple antenna elements with signal processing capability to optimize the overall radiation pattern [1]. There are basically two approaches to implement smart antenna that can short out the above mentioned problems of cellular systems by increasing coverage area and range [4]. They are basically i) Switched beam ii) Adaptive array. Switched beam is a technique to direct the radiation patterns in multiple fixed beam in particular directions with extreme sensitivity. In this case radiation pattern is of static in nature. User selects one of beam according to its direction. If nature of the user is mobile, user will be shifted from present beam to the beam of successive location.

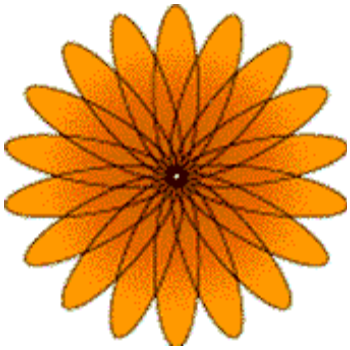

Fig3: Switched Array Pattern

This pattern is different from directional antenna pattern because the radiation pattern obtained by multiple array elements instead of single element so why more spatial selectivity. Adaptive array technique is the most advance technique to date. It has very good immunity to noise and a very great coverage range compare to its counterparts. It has ability to track the present location of the user with the help of adaptive systems and with the help of signal processing algorithm transmission of the signal in desired direction is possible.

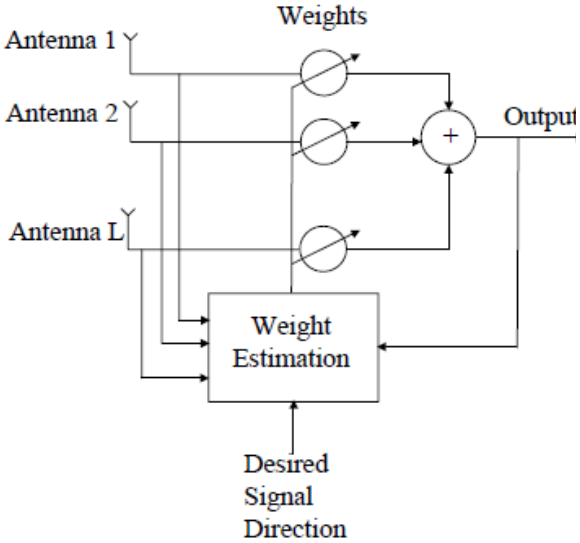

Fig4: Adaptive array techniques

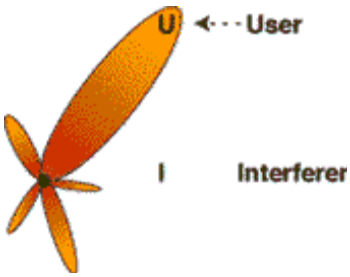

Fig5: Adaptive Array Pattern

Hence, if comparison between adaptive and switched beam is carried out following conclusion can be drawn easily.

i) Adaptive array has very good immunity than switched beam
ii) Coverage of adaptive array is better than switched beam

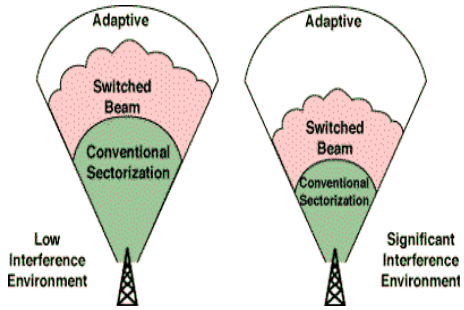

Fig:6 Conventional Vs Switched Vs Adaptive environment

There are several advantages of smart antenna are:

i) Reduction in co-channel interference
ii) Range Improvement
iii) Increase in capacity
iv) Reduction in transmitted power
v) Reduction in hand-off
vi) Mitigation of multipath effect

4. Patch Array Antenna as a Smart Antenna

Usually the radiation pattern of a single element is relatively wide, and one element provides low values of directivity [8]. The number of array elements affects the beam width of a radiation pattern. The microstrip antenna consists of a radiating structure spaced a small fraction of wavelength (0.01 to 0.05 free-space wavelength) above a conducting ground plane. Array of patch antenna is required for the generation of required pattern, to scan the beam in 3D space efficiently and to increase the directivity. Planner array can scan main beam in any direction of θ (elevation) and Φ (azimuth) direction [1].

Thus a planner array is best suited for portable devices that can communicate in any direction. So why antenna arrays have found applications where low cost, lightweight, reduced dimension and high efficient are necessary requirements for wireless communications and can be used in many applications over the broad range of frequencies [7]. In cellular applications it's necessary to design antennas with very high directive characteristics to meet demands of reduction in co- channel interference using antenna array. In so many research works it has been shown that by just increasing the number of elements of patch array antenna performance has greatly improved. This can be shown by the following real life example.

4.1 Case Study

From a field work report prepared by a project manager of a company it has been shown that by increasing the number of beam-forming element of antenna, coverage improved in a great manner [6]. Due to this increase in coverage less number of sites was required to cover the same geographical area. This shows the economical benefit for the arraying of antenna. This conclusion is illustrated by the following table.

Table 1: Percentage of Increase in Coverage

Environment	No beamformer	4-Element beamformer	8-Element beamformer
Urban	1.0 km	1.4 km (+40%)	1.6 km (+60%)
Suburban	2.1 km	2.9 km (+38%)	3.5 km (+67%)
Rural	3.3 km	4.6 km (39%)	5.5 km (+67%)
Mean		(+38%)	(+65%)

From above result it is very clear that with the help of beam-forming component it is possible to enhance the signal strength at the receiver end. Once the signal strength has been improved, it is possible to transmit the signal with lesser bandwidth for the same quality and from here it can be concluded that spectral saving is being achieved with the above tabular result. This conclusion has been drawn for the different environment shown in the table.

Table 2: Spectral Reduction Capability Using Different Antenna Beam-Forming

Environment	4-Element beamforming		8-Element beamforming	
	Without nulling	With nulling	Without nulling	With nulling
Urban	65%	72%	75%	79%
Suburban	63%	69%	74%	76%
Rural	64%	70%	75%	78%
Mean	64%	70%	75%	78%

The above table is the result of beam-forming aspect of array antenna, in form of spectral efficiency just by saving of natural resources in terms of bandwidth. Spectral saving may be one of the major aims of arraying of antenna.

5. Conclusion

Due to inherit characteristics of patch antenna it is most suitable for low profile applications and is frequently used in wireless applications. The arraying of patch antenna enhances its capability of scanning in 3D space as well as improves the directivity. Due to its improved directivity, coverage of the cellular system will increase also, which results in form of economical saving. By arraying of patch antenna, it is possible to enhance the spectral reduction which is the most important saving of the natural resources. And in future that spectral saving can be used for different new communication purpose or number of channels can be increased by this technique and can minimize the problem of call dropping, due to unavailability of channels. So patch antenna is most useful structure for antenna design and at most the array of patch antenna can further enhance the working of antenna for cellular environment.

References:

[1] C. A. Balanis, "Antenna Theory: Analysis and Design", 3rd ed., John Wiley & Sons, 2005.

[2] Salvatore Bellofiore, Jeffrey Foutz, Constantine A. Balanis, and Andreas S. Spanias," Smart-Antenna System for Mobile Communication Networks Part 2: Beamforming and Network Throughput", *IEEE Antenna's and Propagation Magazine,* August 2002 Vol. 44, NO. 4.

[3] Salvatore Bellofiore, Consfan fine A. Balanis, Jeffrey Foufz, and Andreas S. Spanias, "Smart-Antenna Systems for Mobile Communication Networks Part I: Overview and Antenna Design", *IEEE Antenna's and Propagation Magazine, June 2002, Vol. 44, No. 3.*

[4] http://www.iec.orgThe International Engineering Consortium

[5] Jochhen. Schiller, 2006 "Mobile Communications" 2nd Edition, Pearson Education.

[6] Mr M Hook and Dr K D Ward, "Final Report on Development of Smart Antenna technology" http://www.vectorfields.co.uk

[7] Humberto César Chaves Fernandes, José Elesbão C. Neto, Davi Araújo Nascimento, Raykleison Igor R..Moraes And, GiulianoF. B. Oliveira, "Microstrip Antenna Array Applied in High Frequency", www.wseas.us/e-library/conferences/digest2003/papers/463-148.doc.

[8] K.Meena alias Jeyanthi & A.P.Kabilan," Modeling and simulation of Microstrip patch array for smart antennas", International Journal of Engineering,IJE volume 3, Issue 6.

[9] Neela Chattoraj and Jibendu Sekhar Roy, "Application of Genetic Algorithm to the Optimization of Microstrip Antennas with and without Superstrate" , Microwave Review, November, 2006.

Authors Profile

Rajiv Pathak perused his BE degree from Pt. Ravi Shankar Shukla University, Raipur, India, in 2005 and the ME (Electronics and Telecommunication) degree from Chhatisgargh Swami Vivekanand Technical University Bhilai in 2010. Currently doing PhD from Chhatisgargh Swami Vivekanand Technical University Bhilai. His research area of interest is high frequency communication and Antenna Design.

Manas Ranjan Jena is currently pursuing Ph.D from VSS University of Technology,Burla,Odisha,India. He has received M.Tech. degree in Communication System Engineering from VSS University of Technology,Burla,Odisha,India.His current research intrests and activities include simulation, modeling, and measurement of Microstrip Antennas & simulation, modeling, and measurement of fractal antennas.

Dr. B. B. Mangaraj received the BE degree from University College of Engineering, Burla, Orissa, India, in 1994 and the ME TeLE degree and Ph. D. (Engg.) degree from Jadavpur University, Kolkata, India, in 2003 and 2012 respectively. In 2006, he joined the Department of Electronics and Telecommunication Engineering, University College of Engineering, Burla, as a Lecturer. In 2011 he joined as a Reader again in the same department. His present interests are in Analysis, design, coding and optimization of wire antenna structures and micro-strip antennas starting from simple to complicated one. He is also taking interest to apply VLSI in RF Engineering. He has been honored with university medal for his ME course by Jadavpur University.