IJCSN International Journal of Computer Science and Network, May 2014
ISSN (Online) : 2277-5420
www.IJCSN.org

Conference Proceeding – RDFCORDGE - 2014

Neuro Fuzzy PID Controller for BLDC Motor

[1]Nikita Tiwari, [2]Ritesh Diwan

[1] P.G. Scholar, Department of Electronics & Telecommunication Engg. RITEE Raipur, C.G.India

[2] Assistant Prof., Department of Electronics & Telecommunication Engg. RITEE Raipur, C.G.India

Abstract- Brushless DC (BLDC) motors are widely used for many industrial applications because of their high efficiency, high torque and low volume. This project proposes a improved Neuro Fuzzy PID controller to control speed of Brushless DC motor. The proposed controller is called proportional–integral–derivative (PID) controller and NeuroFuzzy proportional–integral–derivative controller. This proposed work provides an overview of performance conventional PID controller and NeuroFuzzy PID controller. It is difficult to tune the parameters and get satisfied control characteristics by using normal conventional PID controller. As the Neuro Fuzzy has the ability to satisfied control characteristics and it is easy for computing, In order to control the BLDC motor, a NeurosFuzzy PID controller is designed as the controller of the BLDC motor. The modeling, control and simulation of the BLDC motor will be done using the software package and will also be introduced to control a speed to be constant when the load varies. The project results will verify that a NeuroFuzzy PID controller has better control performance than the conventional PID controller.[1][2].

1. Introduction

Background

There are mainly two types of dc motors used in industry. The first one is the conventional dc motor where the flux is produced by the current through the field coil of the stationary pole structure. The second type is the brushless dc motor where the permanent magnet provides the necessary air gap flux instead of the wire-wound field poles. BLDC motor is conventionally defined as a permanent magnet synchronous motor with a trapezoidal Back EMF waveform shape[2][3]. .BLDC motors due to their long operating life, high power density, noiseless operation, high speed ranges, high efficiency, high dynamic response and easier control are now widely used in many applications, such as servo drives, computer peripheral equipments and electric vehicles. A brushless DC motor is a synchronous electric motor which is power driven by DC electricity and which has an electronically controlled commutation system, instead of a mechanical commutation system based on brushes. In such motors, current and torque, voltage and rpm are linearly related.

2. Technological Background

In practice, the design of the BLDCM drive involves a complex process such as modeling, control scheme selection, simulation and parameters tuning etc. An expert knowledge of the system is required for tuning the controller parameters of servo system to get the optimal performance. Recently, various modern control solutions are proposed for the speed control design of BLDC motor One very simple and robust controller is the PID controllers. The PID controller works very well for linear systems with optimum gain tuning methods. Due to inexpensive maintenance, low cost, simplicity of operation, ease of design and effectiveness for most linear systems, in most of industries the PID controller is still dominantly used and traditional control system for BLDC is usually used this control.

However, it has been known that conventional PID controllers generally do not work well for non-linear systems, higher order and time-delayed linear systems, and particularly complex and vague systems that have no precise mathematical models.[8][9] Also after a long-time operation of the system, plant dynamics may change therefore fixed PID controller gains do not work properly as they did before. In addition due to system parameter variations and external disturbances, the performance of the PID controllers with previously set controller gains is degraded, because PID controllers need to be reconfigured with these changes. However non-linear controllers has good performance, but design of this type of controllers is very difficult. These reasons lead to say that a intelligent controller is so benefit for systems such as BLDC motors drive.

3. Objective of Project

In this paper, we used NF architectures for implementation of NFC. The NF implements fuzzy inference system with NN architecture. The proposed controller integrates ideas of the FLC and NN structure

into an intelligent control system. The nodes in the hidden layers perform as membership functions and fuzzy rules. Initially, the proposed controller is constructed from the fuzzy IFTHEN rules, which are based on a simple engineering knowledge regarding the controlled BLDC drive system. The proposed controller is used for speed and torque control of a BLDC motor drive.

4. Controlling System

The complete block diagram of speed control of three phase BLDC Motor is below. Two control loops are used to control BLDC motor. The inner loop synchronizes the inverter gates signals with the electromotive forces. The outer loop controls the motor's speed by varying the DC bus voltage.[5][7].

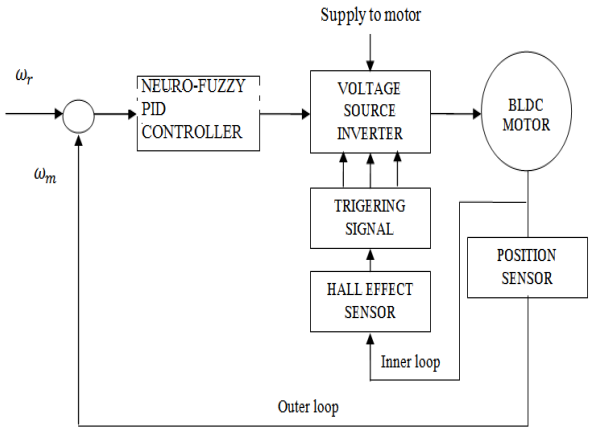

Fig. 1: Block Diagram of speed control of BLDC Motor[11][12]

5. Neuro-Fuzzy Control Systems

In recent years, scientists have obtained important improvement on various types of control technique. Among these control methods, intelligent control algorithms, which are usually regarded as the combination of FL, NN, genetic algorithm and expert system, have presented special superiorities.

FLC Method

The FLC method can be used in systems that have ambiguity or uncertainty. Membership functions with values between 0 and 1 are used in FLC to deal with the control puzzle, such as non-linearity, load disturbance and parameter variation.

The advantages of the fuzzy systems are:

1-. Ability to depict inherent uncertainties of the human knowledge with linguistic variables
2-· Simple interaction of the expert of the domain with the engineer designer of the system;
3·- Easy explanation of the results, because of the natural rules representation;
4·- Easy extension of the base of knowledge through the addition of new rules;
5·- Robustness in relation of the possible disturbances in the system .

Neural Network

The NN is a computation and information processing method that mimics the process found in biological neurons. The basic element of a NN is the neuron. The relationship between two neurons is defined as the weight, which can be tuned or trained off-line, on-line, or combination of both. [8][9]

The advantages of the NNs are:

1· Learning ability;
2· Parallel processing;
3· Generalization capacity;
4· Robustness in relation to disturbances

Every intelligent technique has special properties (e.g. ability to learn, explanation of decisions) that make them suited for particular applications. For example, while NNs[7][8]are suitable at recognizing patterns, they are not capable for explaining how they reach their decisions. FL systems, which can reason with imprecise information, are appropriate at explaining their decisions, but they can not automatically acquire the rules they use to make those decisions. These limitations have been a central driving force behind the creation of combination of intelligent systems where two or more techniques are combined in a manner that overcomes the problems and limitations of individual techniques. Usually, all the combinations of techniques based on NNs and FL are NFLS.

5. Conclusion

This proposed work can control the speed of BLDC motor system using Neuro Fuzzy PID controller. The dynamic response of system can be increased when compared to conventional controller. The proposed method can provide Brushless DC motor with suitable speed regulation.

References

[1] J.E Miller, "Brushless permanent-magnet motor drives," Power Engineering Joumal,voI.2, no. 1 , Jan. 1988.

[2] Q.D.Guo,X.MZhao. BLDC motor principle and technology application [M]. Beijing: China electricity press,2008.

[3] Uzair Ansari, Saqib Alam, Syed Minhaj un Nabi Jafri, ”Modeling and Control of Three Phase BLDC Motor using PID with Genetic Algorithm”, 2011 UKSim 13th International Conference on Modeling and Simulation,pp.189-194.

[4] K. Ang, G. Chong, and Y. Li, “PID control system analysis, design and technology,” IEEE Trans.Control System Technology, vol. 13, pp. 559-576, July 2005.

[5] Atef Saleh Othman Al-Mashakbeh,“ Proportional Integral and DerivativeControl of Brushless DC Motor”, European Journal of ScientificResearch 26-28 July 2009, vol. 35, pg 198-203.

[6] H. Lu, L. Zhang and W. Qu, A New Torque Control Method for Torque Ripple Minimization of BLDC Motors With Un-Ideal Back-EMF.

[7] S. Rajagopalan, Detection of Rotor and Load Faults in Brushless DC Motors Operating under Stationary and Nonstationary Condition, *Dr Thesis, Georgia Institute of Technology*, August 2006.

[8] N. B. Rahman, Neural Network Controller for DC Motor Using MATLAB Application, BS Thesis, University of Malaysia Pahang, November 2008.

[9] S. Jung and S. S. Kim, Hardware Implementation of a Real- Time Neural Network Controller With a DSP an Nonlinear Systems, *IEEE Transactions on Industrial*

[10] K. S. Tang, K. F. Man, G. Chen and S. Kwong, An OptimalFuzzy PID Controller, *IEEE Transaction on IndustrialElectronics*, Vol.48, No.4, pp.757-765, August 2001.

[11] A. Rubaai, D. Ricketts and M. D. Kankam, Development and Implementation of an Adaptive Fuzzy-Neural-Network Controller for Brushless Drives, *IEEE Transaction on Industry Applications,* Vol.38, No.2, pp.441-447, March/April 2002.

[12] S. R. Jalluri and B. V. S Ram, A Neuro Fuzzy Controller for Induction Machines Drives, *Journal of Theoretical and Applied Information Technology,* Vol.19, No.2, September 2010.

[13] J. Vieira, F. M. Dias and A. Mot, Neuro-Fuzzy Systems: A Survey, *WSEAS Transactions on Systems,* Vol.3, No.2, pp.414-419, 2004.